MUSH
Jean-Marie Massaud, 2022

MUSH
Jean-Marie Massaud, 2022

????????

| | |
|---|---|
| **?????????** | ??????? |
| **?????????** | ?????? ?? ??????: ????????????? ?????????? ????? ??????? ????????? |
| | ?????? ?? ????: ?????? ?????? ? ?????????????????? ?????, ????????? ????? |
| **????** | ?????? ?? ??????: ????????????? ?????????? ????? ??????? ????????? |
| | ?????? ?? ????: ?????? ? ?????????????????? ?????, ????????? ????? |

Poliform

MUSH
Jean-Marie Massaud, 2022

???????

?????? 635 ??

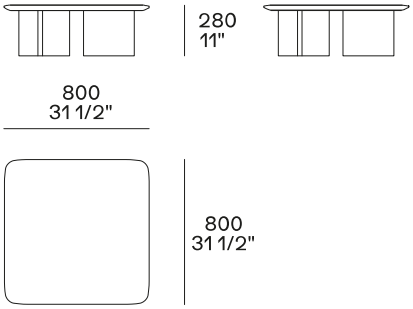


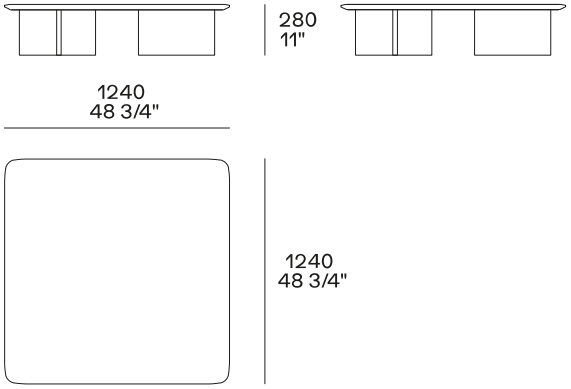


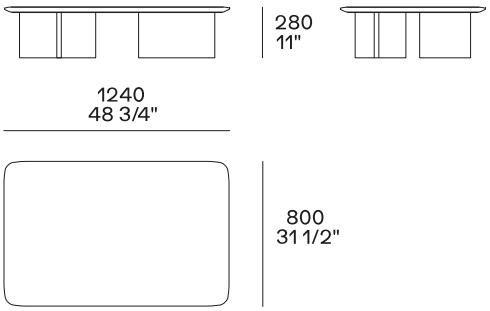


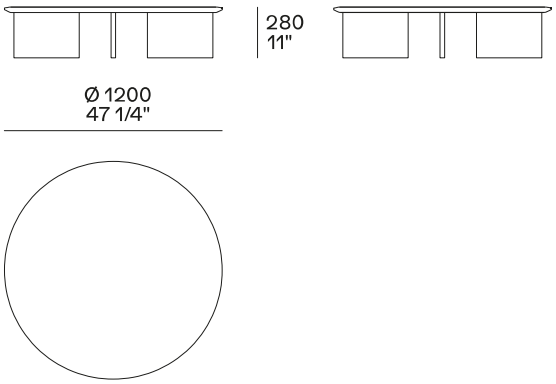


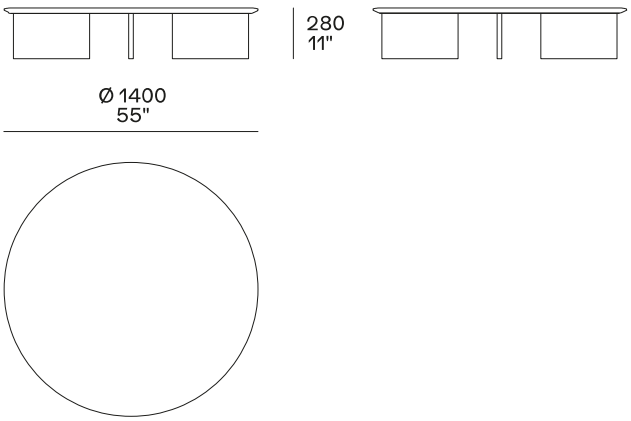

Poliform

MUSH
Jean-Marie Massaud, 2022

?????? 330 ??

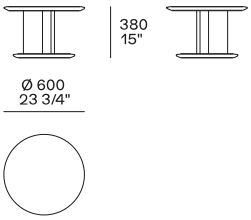


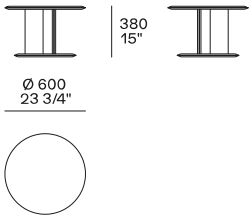


??????? ??????

?????? 500 ??

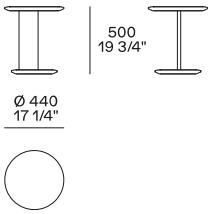


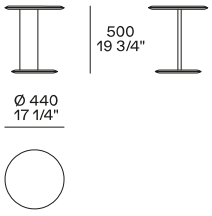


??????? ??????
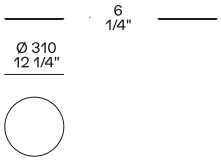
?????????????? ??????