Poliform

WINTER 2024

NEW YORK RENOVATION SALE

SOFA
ARMCHAIRS
COFFEE TABLES
POUFS

BEDS
CHAIRS
TABLES
CARPETS

BENCHES
SIDEBOARDS
DAY SYSTEMS
LIGHTING

Poliform

SOFAS

Poliform

SOFAS

Jane Sofa with Kidney Rest Kushions

- JNDI142/JNPR001/JNPR001
- Leather cat. S Pelle Silk 05 Cemento Legs Spessart oak, Cushions Fabric cat. G Norwich 02 Sabbia
- CONF 22-981388-1/22-981388-2/22-981388-3
- Quantity: 1
- MDS
- Available Upon Request
- Discount 50% Off
- Retail Price: $8,087.95
- **Sale Price: $4,043.98**

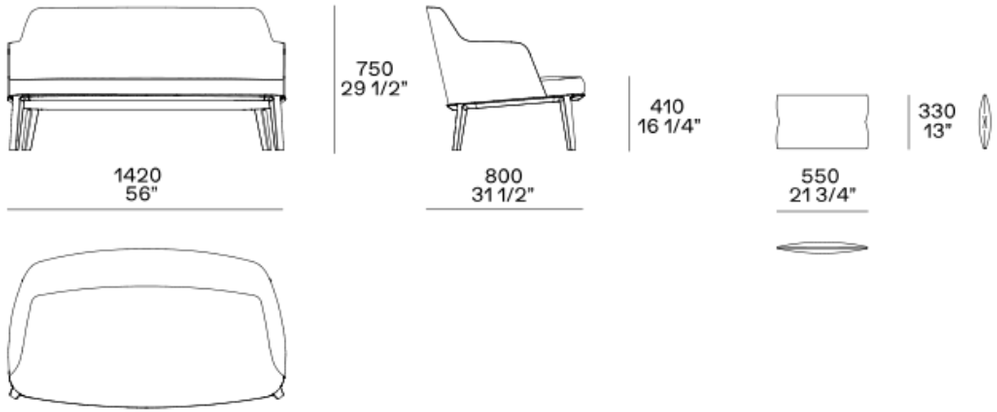

Poliform

SOFAS

Mondrian Sectional

- MOTS150E/MOAR157/MOPC095/MOTD210E/MOPH075/MOCU055P/MOCU050P/MOCU050PT
- Fabric cat. G Brest 12 Sabbia
- Feet Glossy Brown Nickel
- Cushions Fabric cat. G Tebe 03 Tortora, Fabric cat. G Brest 12 Sabbia Insert Fabric cat. E Persia 1404 Carbone
- CONF 22-981383-1/22-981383-2/22-981383-22/22-981383-23/22-981383-20 22-981383-5 22-981383-6 22-981383-7/22-981383-8/22-981383-9/22-981383-10/22-981383-24
- Quantity: 1
- MDS
- Available Upon Request
- Discount 40% Off
- Retail Price: $42,550.00
- **Sale Price: $25,530.00**

Mondrian Sectional

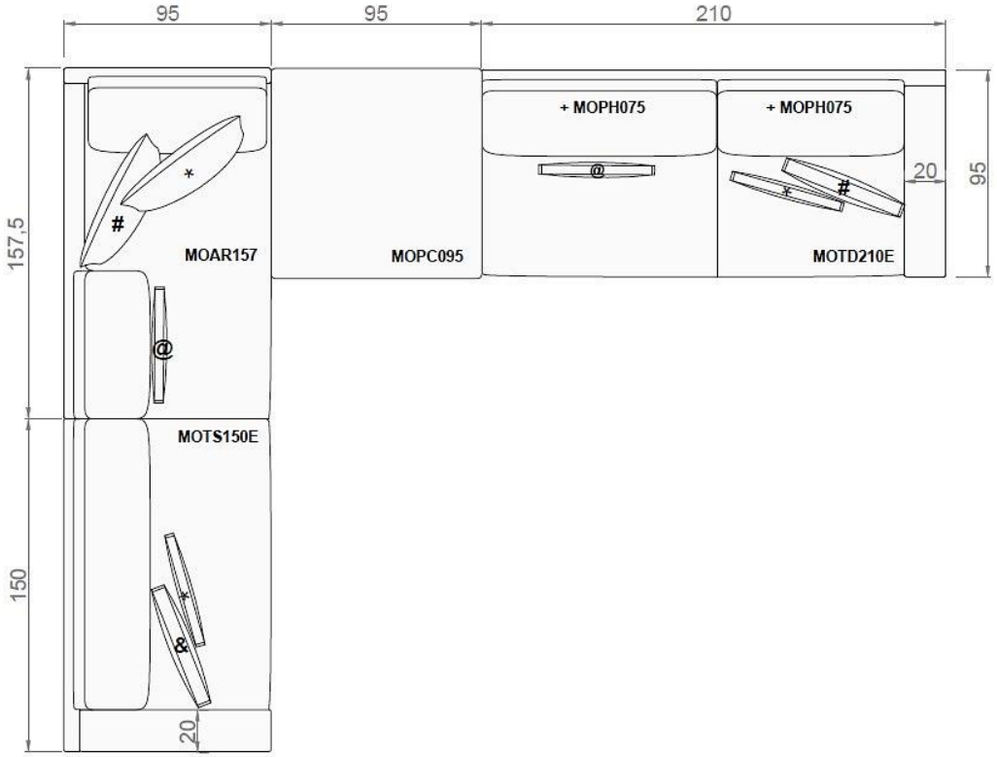

NEW Dune Sofa Sectional

- DUPS1236/DUAS1236/DUCE1802/DUAD 1236/DUPD1236/5x CUC03S4/2x CUC03S4
- Aspen Neve, Cushions Aspen Neve x 2, Aspen Sabbia x 5, all includes stain resistant treatment.
- CONF 21-968551-53/21-968551-54/21-968551-55/21-968551-56/21-968551-57/21-968551-58/21-968551-59
- Quantity: 1
- MDS
- Available Upon Request
- Discount 40% Off
- Retail Price: $22,670.44
- **Sale Price: 13,602.264**

SOFAS

Dune Sofa Sectional

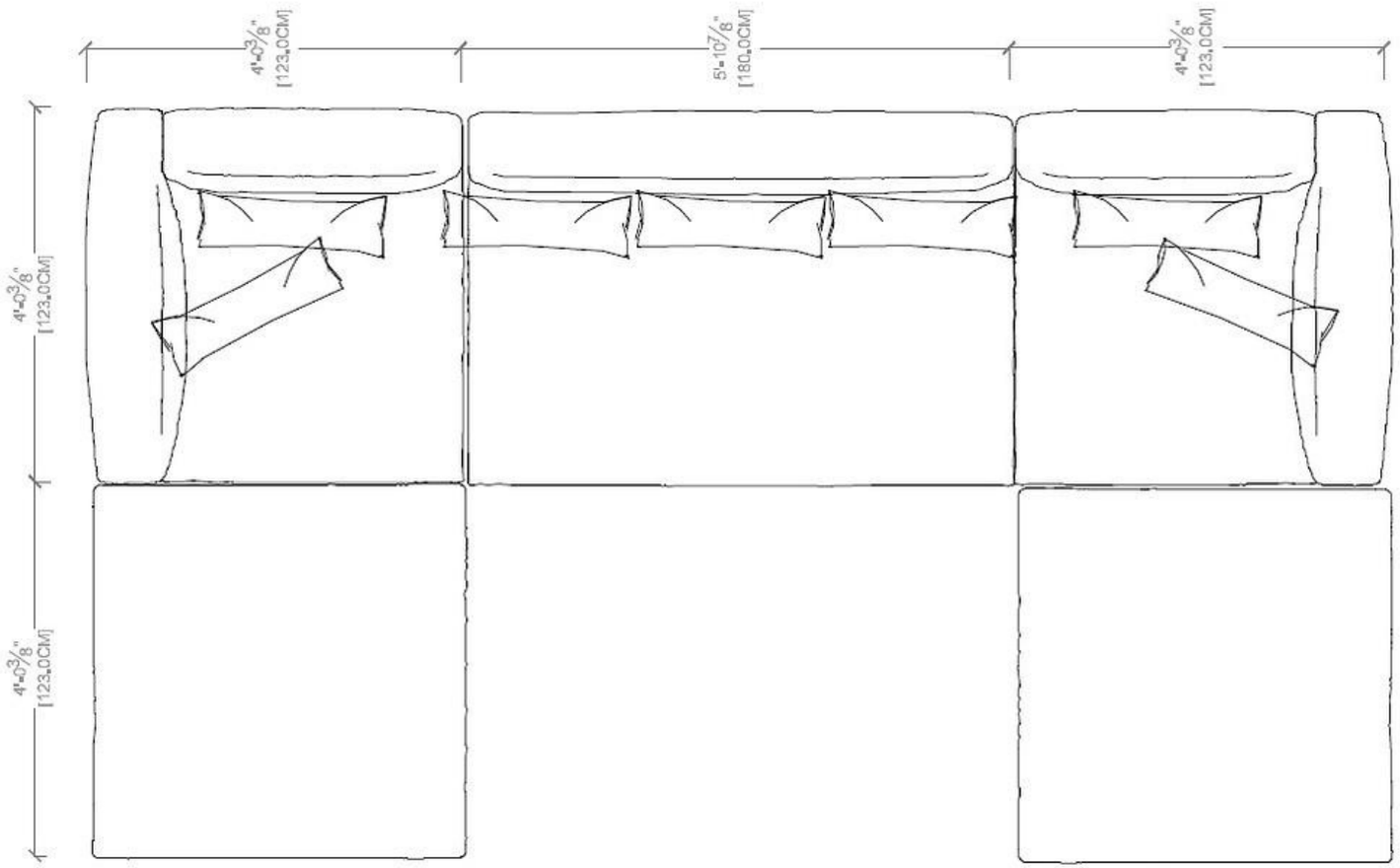

NEW Saint-Germain Left Boomerang Sofa

- SJDY320/3x SJCS070/SJCU050/1x SJCU055
- Fabric cat. B Eraclea Sabbia
- CONF 23-990539/23-990873
- Quantity: 1
- MDS
- Available Upon Request
- Discount 40% Off
- Retail Price: $13,368.00
- **Sale Price: $8,020.80**

NEW Saint-Germain Left Boomerang Sofa

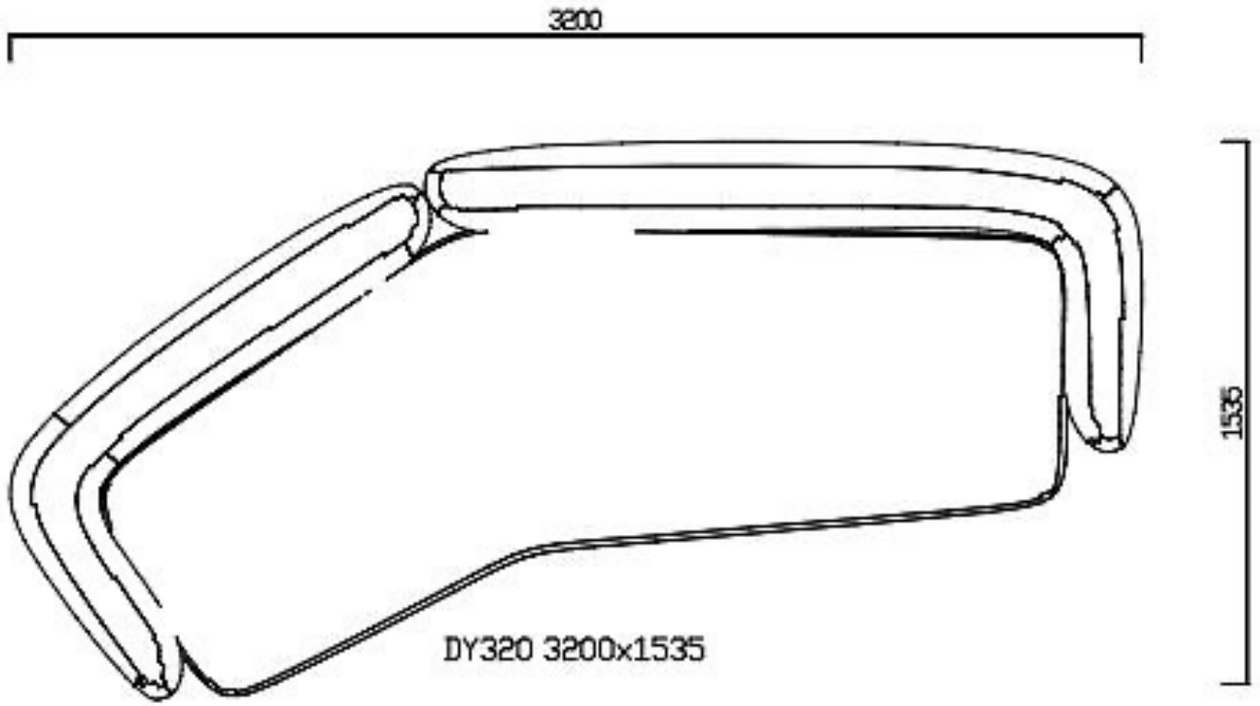

SOFAS

Dune Sofa

- DUTS1004/DUTD1004/C06CG/C02C/1x SJCU055
- Fabric cat. E Naxos 16 Sabbia, Cushion Fabric cat. D Sendai 03 Fango
- CONF 22-981391-1/22-981391-2/22-981391-3/22-981391-5
- Quantity: 1
- MDS
- Contact salesperson for availability
- Discount 40% Off
- Retail Price: $11,136.60
- **Sale Price: $6,681.96**

Dune Sofa

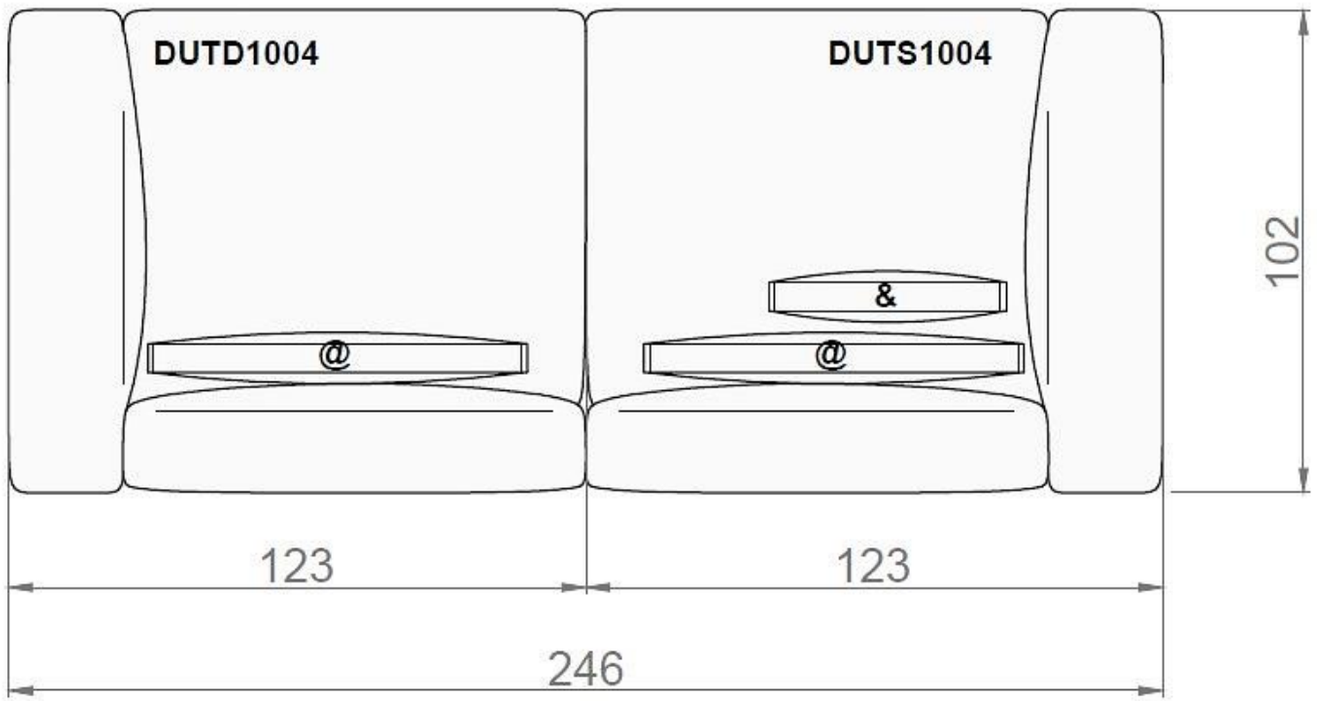

SOFAS

Brera Sectional

- TZ313S/DX197M/TD119/CS080/ C02C
- Fabric cat. D Kiala 02 Champagne Feet Matte Brown Nickel Base Hide Invecchiato, Cushions Fabric cat. M Yushan 01 Avorio
- CONF 22-984505-3/22-984505-4/22-984505-12/22-984505-9
- Quantity: 1
- MDS
- Contact salesperson for availability
- Discount 40% Off
- Retail Price: $35,993.85
- **Sale Price: $21,596.31**

Brera Sectional

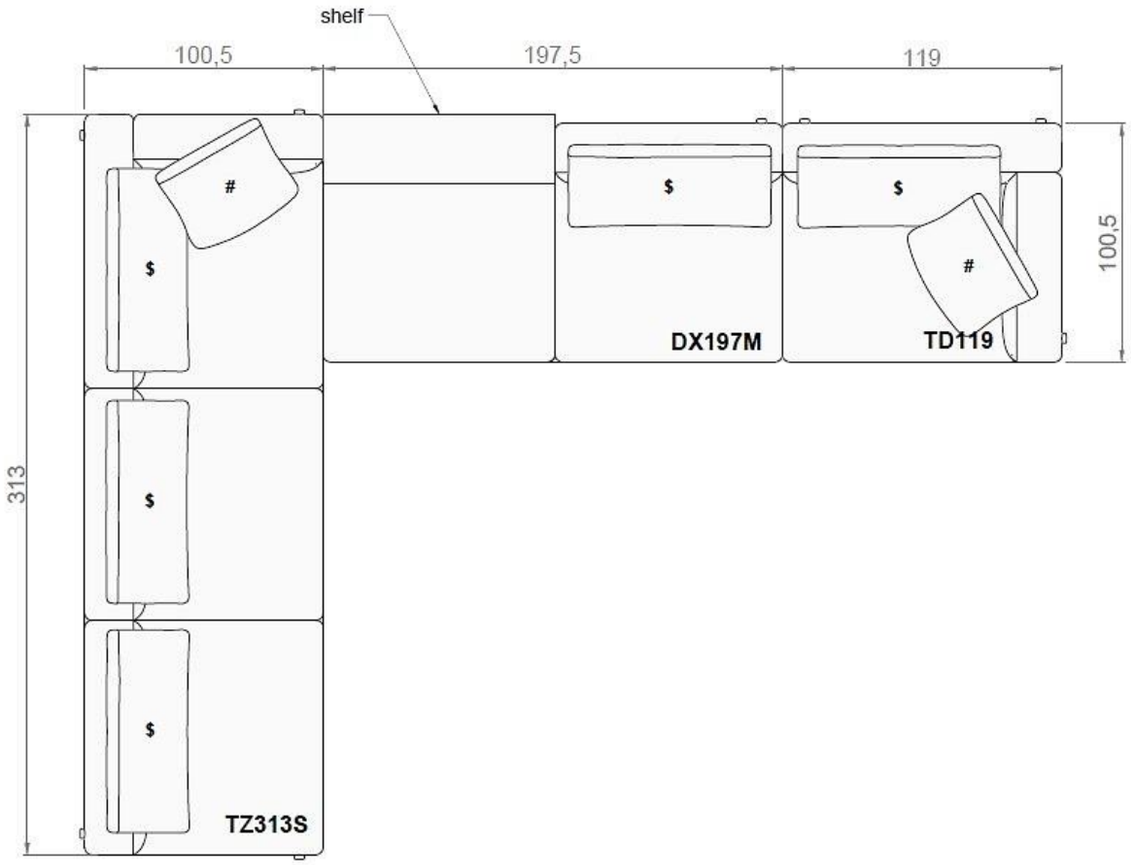

SOFAS

Saint-Germain Sectional

- SJTS181A/ SJCS080/ SJCS070/ SJCU050/
- Fabric Cat. G Siro 01 Bianco, Fabric cat. E Persia 1404 Carbone
- CONF 22-981264-136
- Quantity: 1
- MDS
- Availability: April
- Discount 40% Off
- Retail Price: $33,899.70
- **Sale Price: $20,339.82**

Saint-Germain Sectional

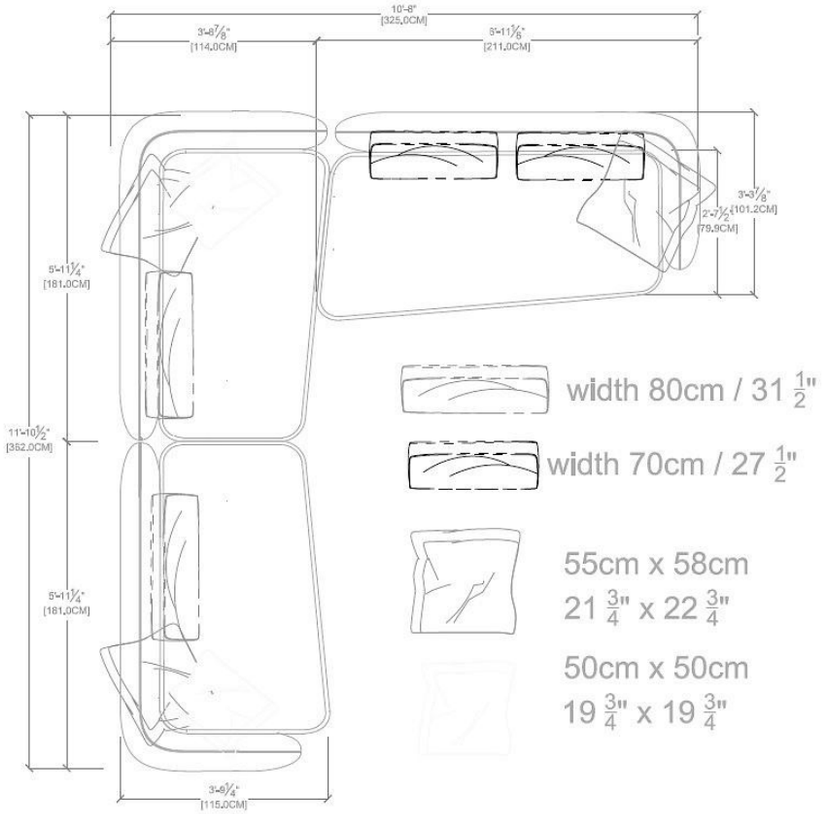

Saint-Germain Left Inclined Peninsula Corner Unit

- SJAT220/SJCS060/SJCU055/SJCT070/SJCU050
- Sofa fabric cat. G siro 01 bianco; cushions fabric cat. G siro 01 bianco; fabric cat. G brest 11 cioccolato
- CONF 22-981539-8/22-981539-1/22-981539-2/22-981539-3/22-981539-4/22-981539-5
- Quantity: 1
- MDS
- Availability: April
- Discount 40% Off
- Retail Price: $14,700.45
- **Sale Price: $8,820.27**

Saint-Germain Left Inclined Peninsula Corner Unit

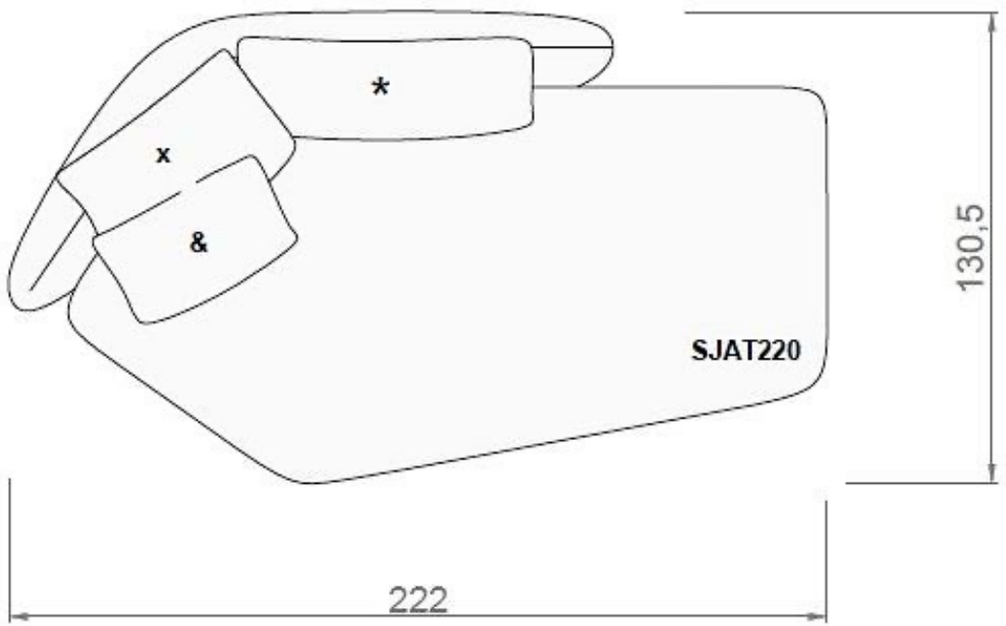

ARMCHAIRS

Poliform

ARMCHAIRS

Jane Lounge Armchair

- JNPL074A
- Fabric cat. and Nayoro Ghiaccio, Legs Black Elm
- CONF 22-986412-2
- Quantity: 1
- MDS
- Available Upon Request
- Discount 50% Off
- Retail Price: $5,371.65
- **Sale Price: $2,685.83**

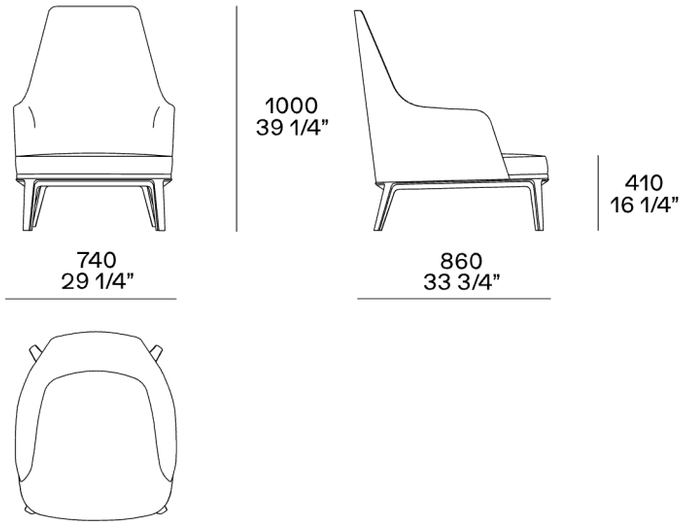

ARMCHAIRS

Kay Lounge Armchair

- KLPL073Q
- Finish: Woven Hide 02 Nero Base Satin Chrome
- CONF 22-978720-22
- Quantity: 1
- MDS
- Available Upon Request
- Discount: 50% Off
- Retail Price: $6,701.05
- **Sale Price: $3,350.53**
- **Note:** must be sold with the Pouf

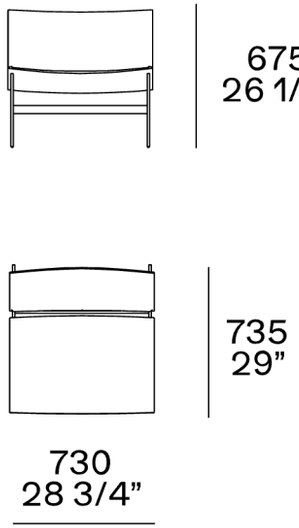

Poliform

Kay Lounge Pouf

- KLPO073Q
- Finish: Woven Hide 02 Nero Base Satin Chrome
- CONF 22-978720-23
- Quantity: 1
- MDS
- Available Upon Request
- Discount 50% Off
- Retail Price: $3,660.45
- **Sale Price: $ 1,830.23**
- **Note: must be sold together with the Kay Armchair**

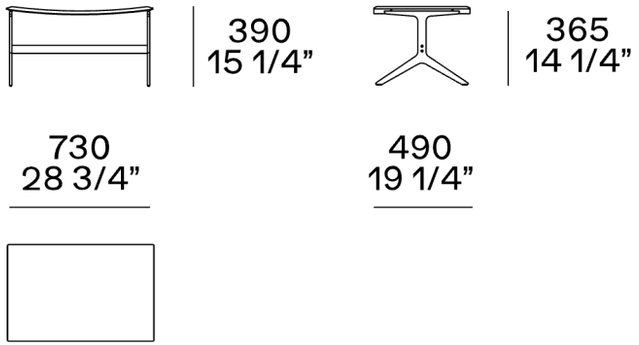

ARMCHAIRS

Stanford Armchair

- STPG705N
- Leather cat. Y soft 10 Prugna Legs Matte Brown Nickel
- CONF 22-981392-9
- Quantity: 1
- MDS
- Available Upon Request
- Discount 50% Off
- Retail Price: $6,786.15
- **Sale Price: $3,393.08**

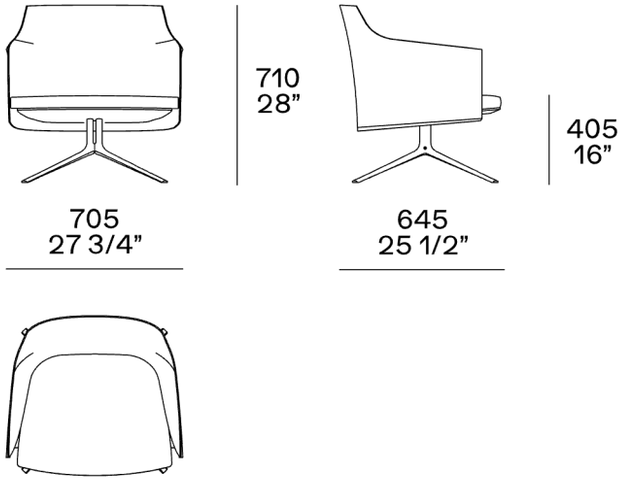

Poliform

ARMCHAIRS

Kaori Armchair

- KAPL051
- Inner leather cat. Y pelle silk terracota; outer structure hide castagna; legs brushed brown nickel
- CONF 23-988399-2
- Quantity: 1
- MDS
- Availability: April
- Discount 40% Off
- Retail Price: $6,786.15
- **Sale Price: $4,071.69**

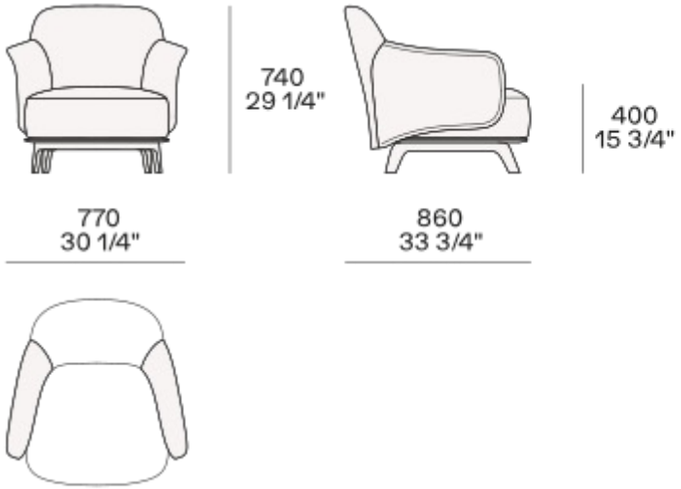

ARMCHAIRS

Curve Armchair with Pouf

- CVPL067/ CVFO056
- Fabric cat. E agadir 04 tortora; structure black elm
- CONF 22-984018-13/22-984018-14
- Quantity: 1
- MDS
- Availability: April
- Discount 40% Off
- Retail Price Armchair: $2,856.60
- **Sale Price Armchair: $1,713.96**
- Retail Price Pouf: $1,934.30
- **Sale Price Pouf: $1,160.58**

Poliform

ARMCHAIRS

Curve Armchair

- CVPL067
- Fabric cat. E agadir 04 tortora; structure black elm
- CONF 22-984018-12
- Quantity: 1
- MDS
- Availability: April
- Discount 40% Off
- Retail Price: $2,856.60
- **Sale Price: $1,713.96**

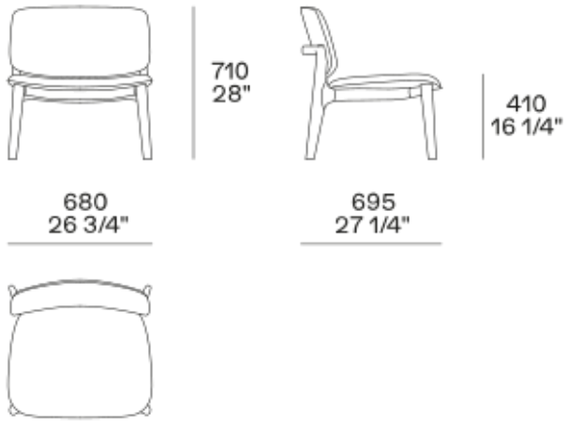

Poliform

ARMCHAIRS

Stanford Armchair

- STPG705N
- Fabric Leather Y-Pelle Soft Oliva Back Hide 38 Oliva Base Matt Brown Nickel
- CONF 22-978832-701/ 22-978832-6
- Quantity:2
- Available Upon Request: A&D Showroom
- Discount 40% Off
- Retail Price: $6979.35
- **Sale Price: $4187.61**

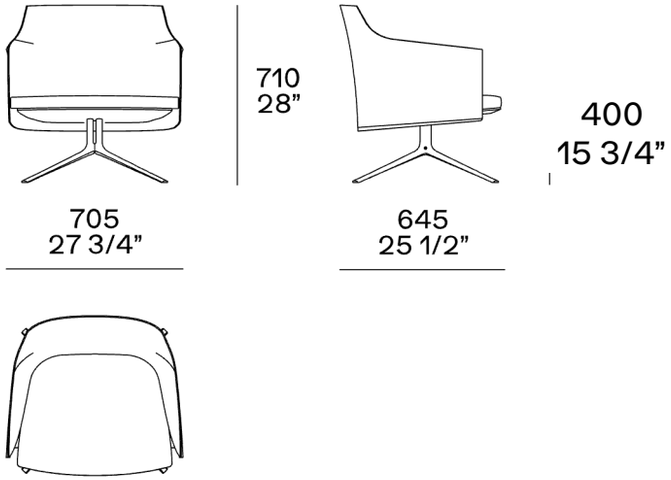

ARMCHAIRS

Jane Armchair with Kidney Cushion

- JNPL067
- Finish: E-ARCADIA 12 POLVER
- Base: Black Elm
- CONF 22-978832-50/ 22-978832-49
- Quantity: 1
- Available Upon Request: A&D Showroom
- Discount: 40% Off
- Retail Price: $4033.05
- **Sale Price: $2419.83**

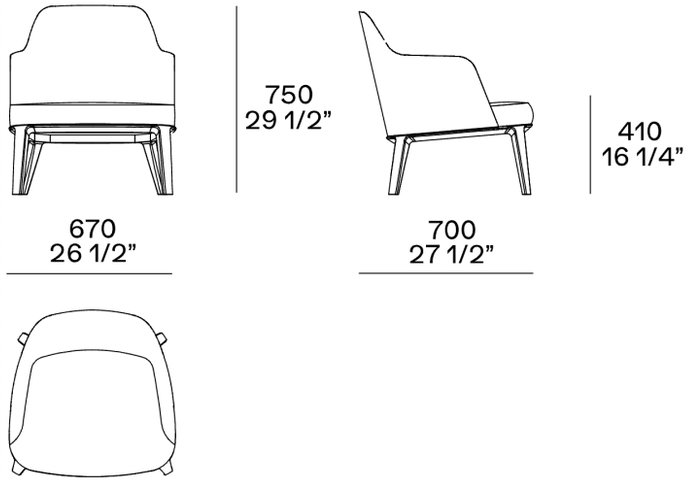

ARMCHAIRS

Jane Armchair with Kidney Cushion

- JNPL067
- Finish: E-ARCADIA 12 POLVER
- Base: Black Elm
- CONF 22-978832-50/ 22-978832-49
- Quantity: 1
- Available Upon Request: A&D Showroom
- Discount: 40% Off
- Retail Price: $4033.05
- **Sale Price: $2419.83**

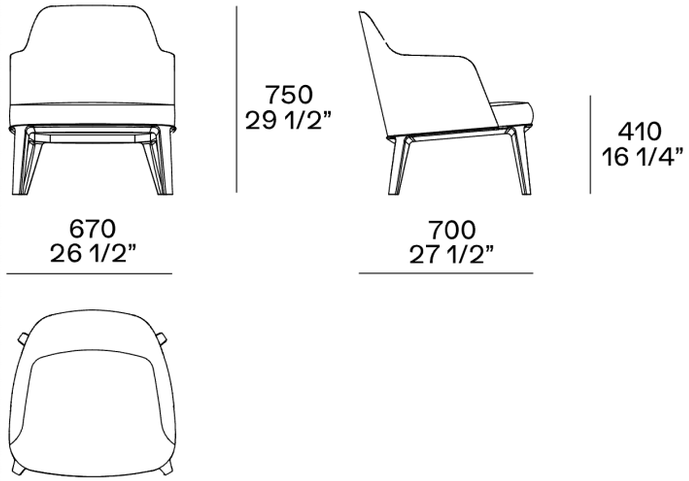

COFFEE TABLES

Poliform

COFFEE TABLES

Mondrian Round Small Coffee Table

- MOTA055RA
- Top Spessart Oak Wood Legs Bronzed Gold
- CONF 22-260725-34
- Quantity: 1
- MDS
- Available Upon Request
- Discount: 50% Off
- Retail Price: $2,498.95
- **Sale Price: $1,249.48**

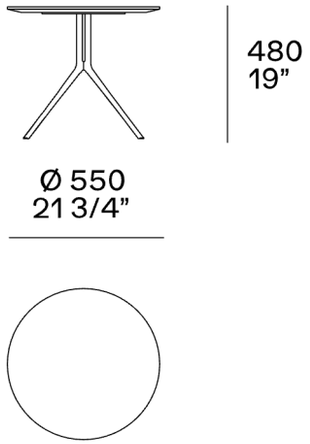

COFFEE TABLES

Mondrian Round Small Coffee Table

- MOTA080R
- Top Moka Glossy Lacquer Legs Bronzed Gold
- CONF 19-570852-5
- Quantity: 1
- A&D
- Available Upon Request
- Discount: 70% Off
- Retail Price: $3,576.50
- **Sale Price: $1,072.00**

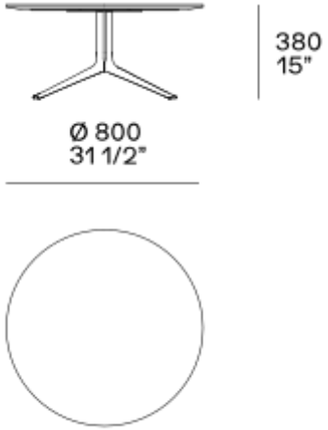

COFFEE TABLES

Bristol Coffee Table

- TC140GN
- Top Marble Glossy Green Lepanto with Polyester Treatment
- Base Black Elm
- Inserts Glossy Brown Nickel
- CONF 22-407534-14
- Quantity: 1
- MDS
- Available Upon Request
- Discount: 40% Off
- Retail Price: $20,154.90
- **Sale Price: $12,092.94**

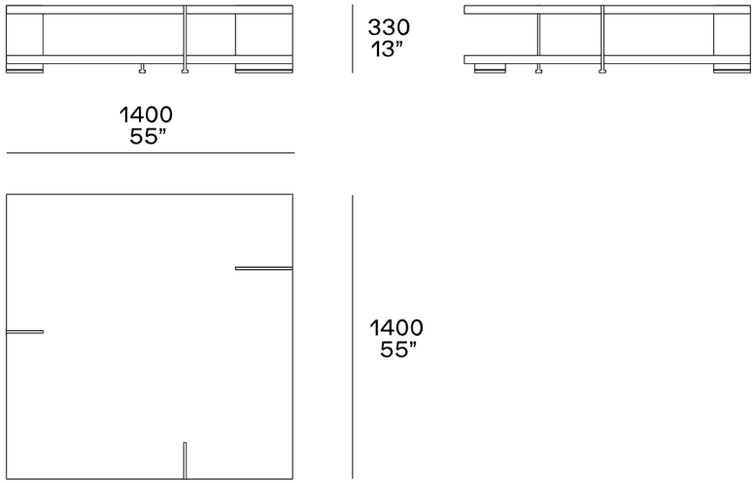

COFFEE TABLES

Mondrian Oval Coffee Table

- MOTA1800
- Top: Glossy Green Lepanto
- Base: Bronze Gold Polished
- CONF 22-261305-12
- Quantity: 1
- Available Upon Request: A&D Showroom
- Discount: 40% Off
- Retail Price: $11,475.85
- **Sale Price: $6,885.51**

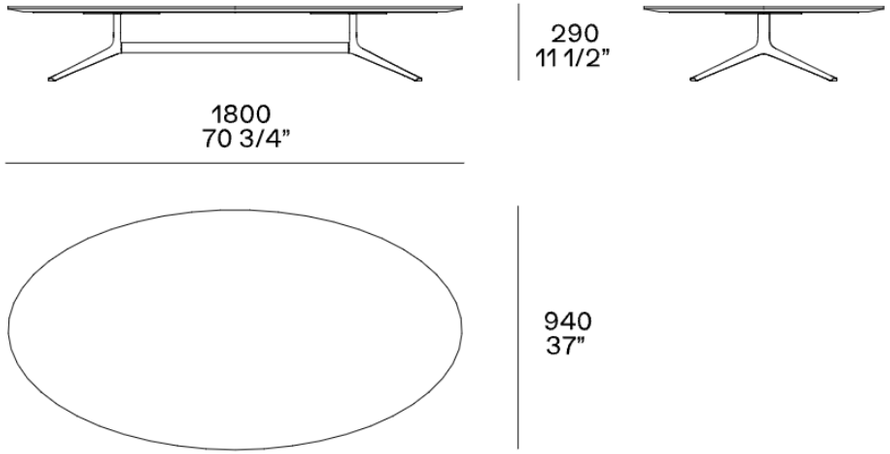

COFFEE TABLES

Koishi Coffee Table

- TKO072V
- Top ebano stone; leg brunito
- CONF 22-271643-6
- Quantity: 1
- Availability: April
- Discount: 40% Off
- Retail Price: $2,879.60
- **Sale Price: $1,727.76**

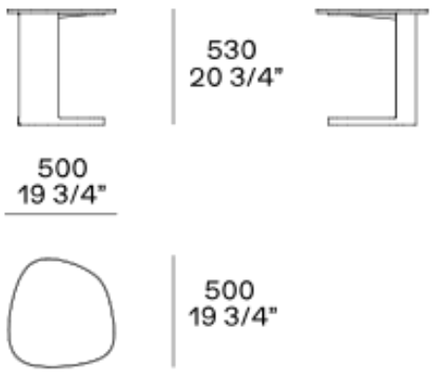

Poliform

COFFEE TABLES

Koishi Coffee Table

- TKO072V
- Top blue glass, structure Champagne
- CONF 23-502806-29
- Quantity: 1
- Availability: April
- Discount: 40% Off
- Retail Price: $2,826.70
- **Sale Price: $1,696.02**

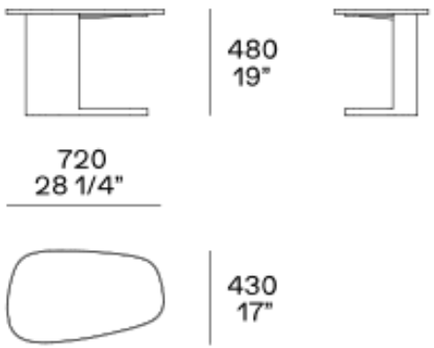

COFFEE TABLES

Koishi Coffee Table

- TKO120
- Top marble matte zecevo structure Champagne
- CONF 22-270605-131
- Quantity: 1
- Availability: April
- Discount: 40% Off
- Retail Price: $8,726.20
- **Sale Price: $5,235.72**

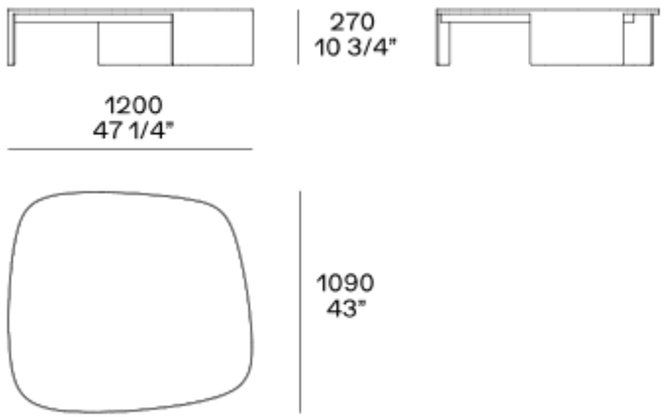

Poliform

COFFEE TABLES

Koishi Coffee Table

- TKO105
- Top marble matte zecevo structure Champagne
- CONF 22-270604-118
- Quantity: 1
- Availability: April
- Discount: 40% Off
- Retail Price: $5,840.85
- **Sale Price: $3,504.51**

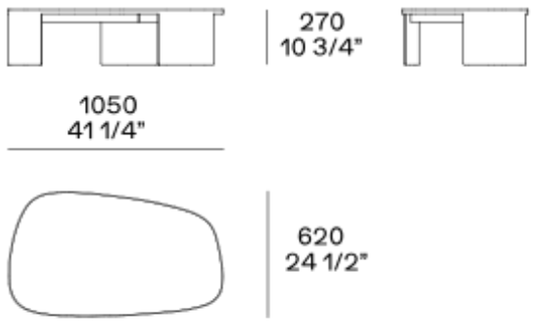

Poliform

COFFEE TABLES

Orbit Tall Coffee Table

- TOR044
- Bronze glass
- CONF 22-292009-2
- Quantity: 1
- Availability: April
- Discount: 40% Off
- Retail Price: $3,410.90
- **Sale Price: $2,046.54**

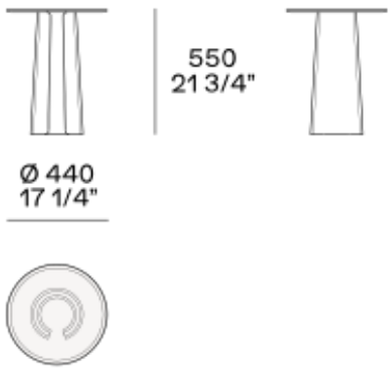

Poliform

COFFEE TABLES

Mondrian Oval Coffee Table

- MOTA180O
- Top marble matte verde lepanto with treatment; legs glossy brown nickel
- CONF 22-260725-32
- Quantity: 1
- Availability: April
- Discount: 40% Off
- Retail Price: $9,263.25
- **Sale Price: $5,557.95**

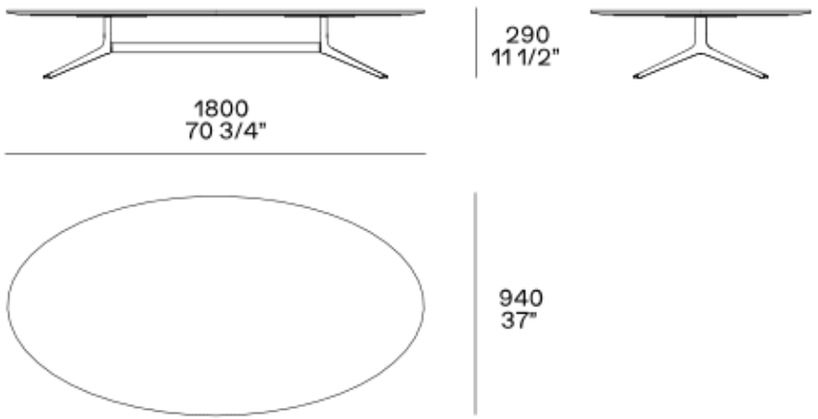

COFFEE TABLES

Mondrian Tall Round Coffee Table

- MOTA080RA
- Top glossy lacquered moka; legs glossy brown nickel
- CONF 22-260725-5
- Quantity: 1
- Availability: April
- Discount: 40% Off
- Retail Price: $1,789.40
- **Sale Price: $1,073.64**

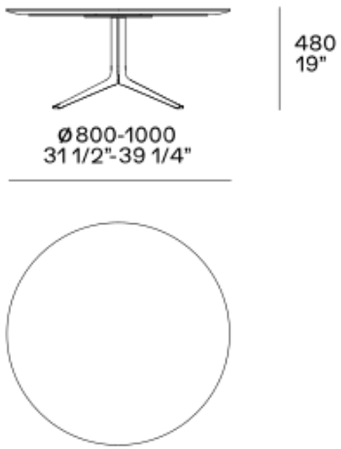

Poliform

COFFEE TABLES

Soori Coffee Table

- TSO800
- Antique bronze
- CONF 22-280782-1
- Quantity: 1
- Availability: April
- Discount: 40% Off
- Retail Price: $8,321.40
- **Sale Price: $4,992.84**

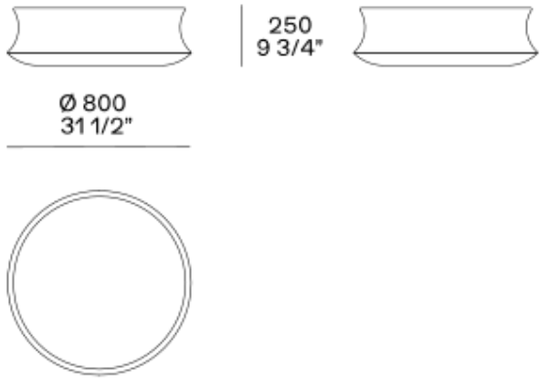

POUFS

Poliform

POUFS

Saint-Germain Pouf

- SJPO105
- Leather cat. X Pelle 02 Deep Sabbia
- CONF 22-978724-20
- Quantity: 1
- MDS
- Available Upon Request
- Retail Price: $3,234.95
- Discount: 50% Off
- **Sale Price: $1,617.48**

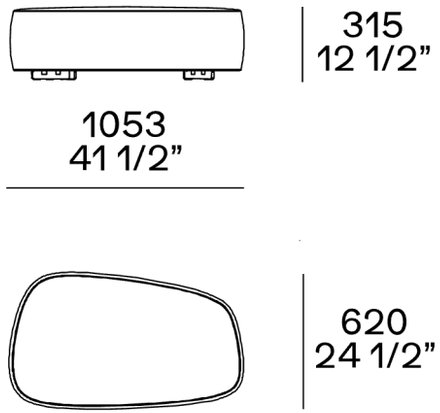

POUFS

New York Round Pouf

- NYPO053T
- Cat. G siro 02 lino feet plastic
- CONF 22-978513-2
- Quantity: 1
- MDS
- Availability: April
- Discount: 40% Off
- Retail Price: $1,575.50
- **Sale Price: $945.30**

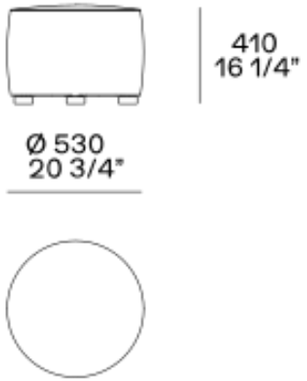

BEDS

Poliform

NEW Rever Bed King Size with Storage and Roll Cushions

- LMRVKFR/TERVKF/RUKIN
- Fabric cat. E Arcadia 05 Bronzo Bands Leather cat. Y Pelle Silk 12 Senape
- CONF 22-260899-1/22-260899-3/22-260899-6
- Quantity: 1
- MDS
- Available Upon Request
- Discount: 50% Off
- Retail Price: $11,946.20
- **Sale Price: $5,973.10**

NEW Rever Bed King Size with Storage and Roll Cushions

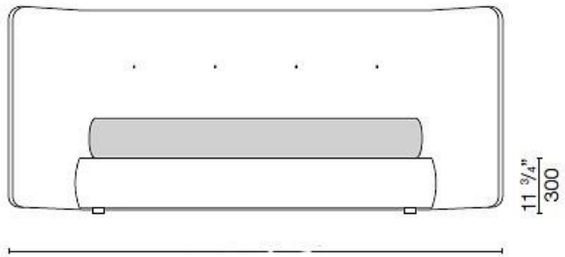

2815 - 110 ¾"king size

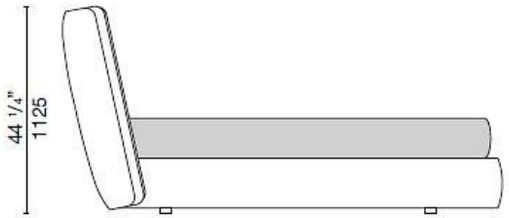

95 ¾"
2430 king size
for mattresses 80" length
for mattresses 2030 mm length

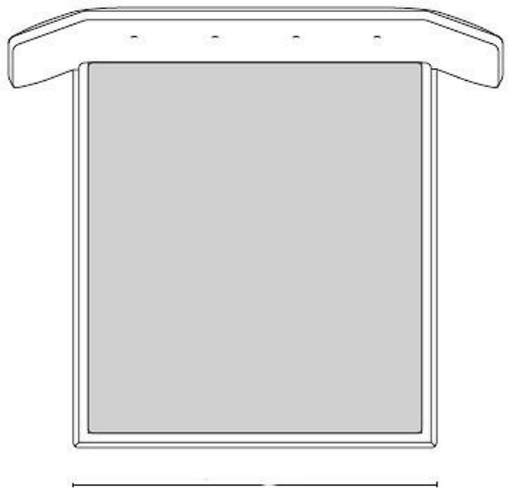

2110 - 83" king size

CHAIRS

Poliform

CHAIRS

Grace Dining Chair No Arms Woven Back

- S85P
- Legs Black Elm Leather cat. Y Nabuk Tortora
- CONF 22-269386-4
- Quantity: 1
- MDS
- Available Upon Request
- Discount: 50% Off
- Retail Price: $2,766.90
- **Sale Price: $1,383.45**

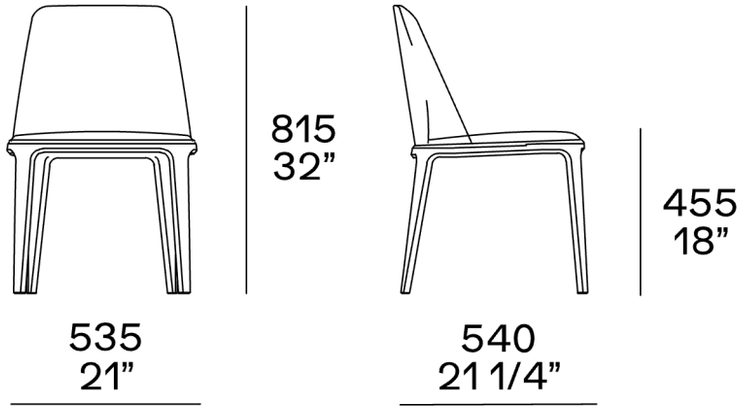

Poliform

CHAIRS

Curve Dining Chair with Arms

- S116B
- Leather cat. S silk cognac; base black elm
- CONF 22-280792-2/22-280792-3
- Quantity: 2
- MDS
- Availability: April
- Discount: 40% Off
- Retail Price: $2,584.05
- **Sale Price: $1,550.43**

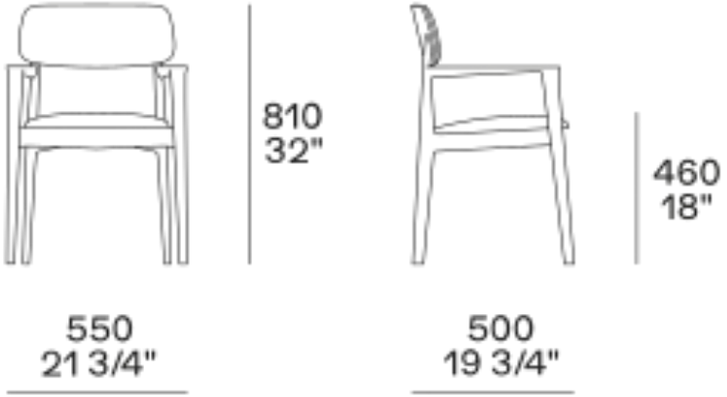

Poliform

CHAIRS

Curve Dining Chair with No Arms

- S116
- Leather cat. S silk cognac; base black elm
- CONF 22-280792-8/22-280792-4/22-280792-6/22-280792-5/22-280792-9/22-280792-7
- Quantity: 6
- MDS
- Availability: April
- Discount: 40% Off
- Retail Price: $2,337.95
- **Sale Price: $1,402.77**

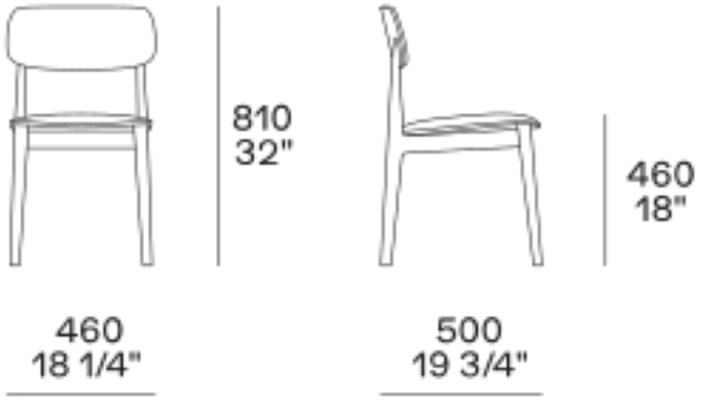

Poliform

CHAIRS

Grace Dining Chair with Arms

- S85
- Farbic cat. D antea 03 visone; legs black elm
- CONF 22-260481-8/22-260481-7
- Quantity: 2
- MDS
- Availability: April
- Discount: 40% Off
- Retail Price: $1,752.60
- **Sale Price: $1,051.56**

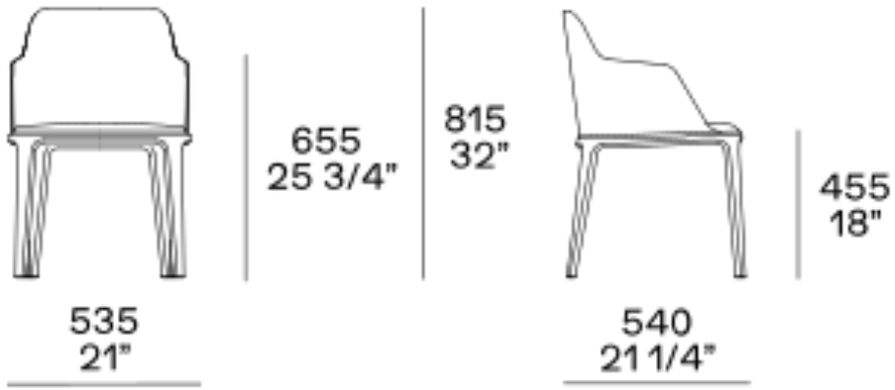

Poliform

CHAIRS

Grace Dining Chair with No Arms

- S116
- Farbic cat. D antea 03 visone; legs black elm
- CONF 22-260481-6/22-260481-5/22-260481-4/22-260481-3/22-260481-7/22-260481-8
- Quantity: 4
- MDS
- Availability: April
- Discount: 40% Off
- Retail Price: $1,644.50
- **Sale Price: $986.70**

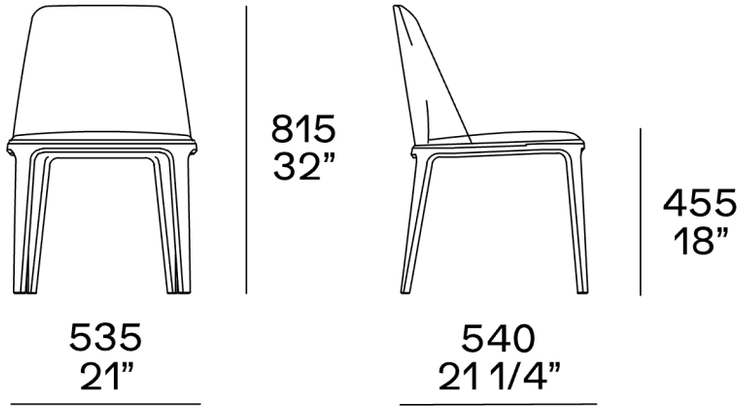

Poliform

TABLES

CHAIRS

Mondrian Round Dining Table

- MOTG165R
- Top Carrara Marble Glossy with Polyester Leg Brown Nickel
- Dimension: d.165cm or 65" h.74cm or 29.25"
- CONF 21-253538-5
- Quantity: 1
- MDS
- Available Upon Request
- Retail Price: $11,462.05
- Discount: 50% Off
- **Sale Price: $6,877.23**

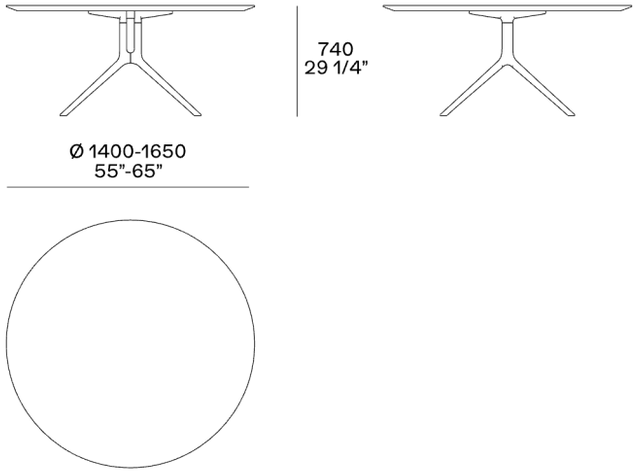

Poliform

NEW Mondrian Round Dining Table

- MOTG165R
- Top black elm wood, Legs glossy brown nickel.
- CONF 21-226581-69
- Dimension: w.165cm or 64.96in, h.74cm or 29.13in
- Quantity: 1
- MDS
- Available Upon Request
- **Has marks on the top hide**
- Discount: 40% Off
- Retail Price: $6,068.36
- **Sale Price: $3,641.02**

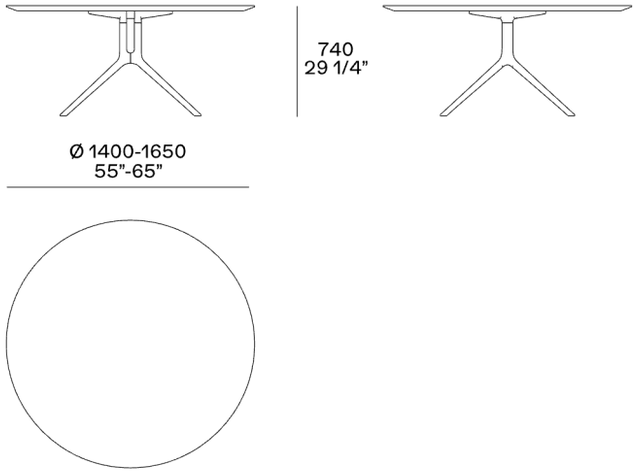

CHAIRS

Flute Dining Table

- FTTFT125
- Leg Glossy Moka Top Glossy Calacatta Gold Marble with Treatment
- CONF 22-290073-1
- Dimensions: d.125cm or 49.25" h.74cm or 29.15"
- Quantity: 1
- MDS
- Available Upon Request
- Retail Price: $8,186.85
- Discount: 50% Off
- **Sale Price: $4,093.43**

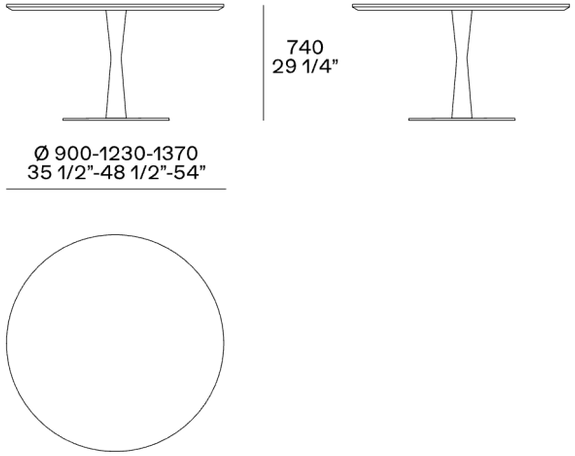

Poliform

Mathieu Desk with Drawer

- SMH140 + CA001
- Top Invecchiata Hide Frame Black Elm Lets Glossy Brown Nickel Lacquer Carbone
- CONF 22-260899-12/22-260899-13
- Dimensions: w.140cm or 55" d.77cm or 27.50" h.73.5cm or 29"
- Quantity: 1
- MDS
- Available Upon Request
- **Has marks on the top hide**
- Retail Price: $6,910.35
- Discount: 50% Off
- **Sale Price: $3,455.18**

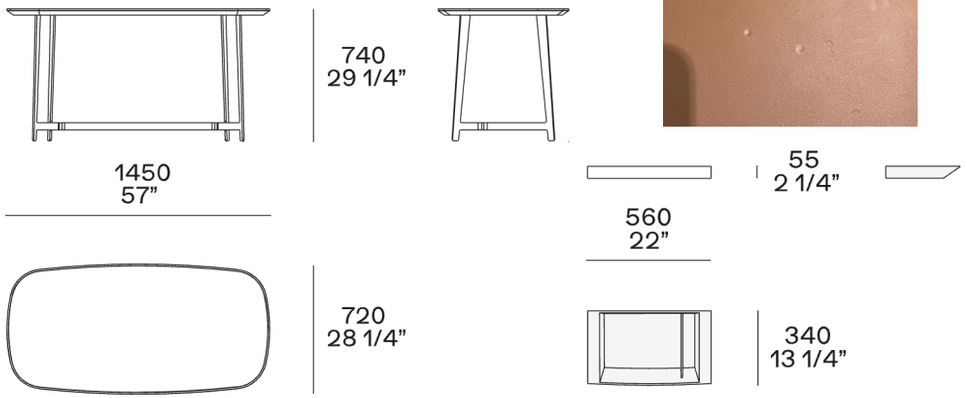

CHAIRS

Curve Dining Table with Hide

- CVTG285C
- Top marble matte sahara noir; legs black elm; hide insert invecchiato
- CONF 22-280792-1
- Quantity: 1
- MDS
- Availability: April
- Discount: 40% Off
- Retail Price: $17,608.80
- **Sale Price: $10,565.28**

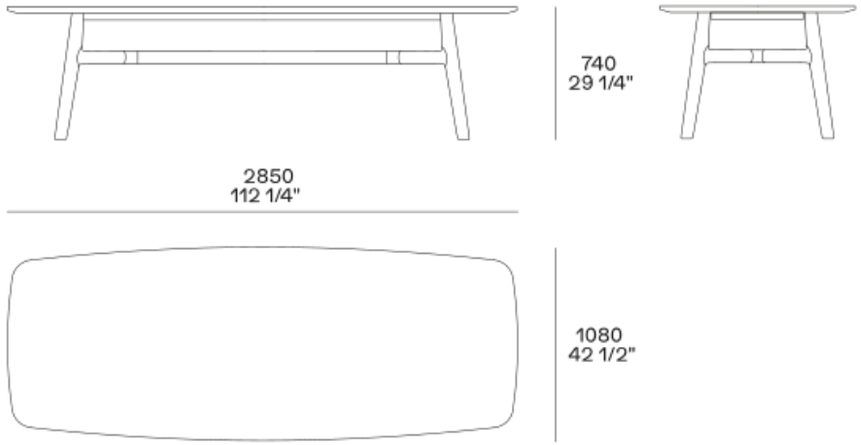

CHAIRS

Concorde Dining Table with Hide

- TCN280
- Top marble matte sahara noir; legs black elm; hide insert invecchiato
- CONF 22-260481-1
- Quantity: 1
- MDS
- Availability: April
- Discount: 40% Off
- Retail Price: $16,519.75
- **Sale Price: $12,326.16**

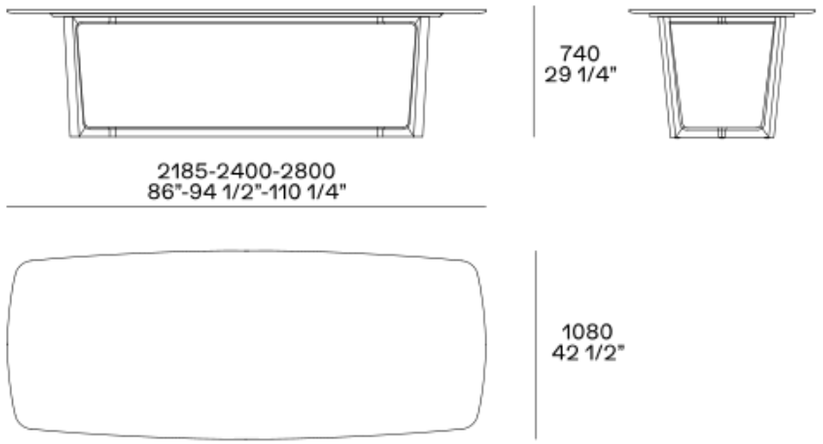

Poliform

CARPETS

Poliform

CARPET

Cannelé Rectangular Carpet

- COTP
- Handmade with handloom technique, cotton weave, fur in Himalayan wool and bamboo silk, boucle in Himalayan wool
- Dimensions: 450cm x 450cm/21ft 1 1/8in x 21ft 1 1/8in
- CONF 22-260781-20
- Quantity: 1
- MDS
- Availability: April
- Discount: 40% Off
- Retail Price: $19,771.09
- **Sale Price: $11,862.65**

CARPET

Cannelé Rectangular Carpet

- COTP
- Cotton weave, fur in aloe and bamboo silk
- Dimensions: 230cm x 400cm/7ft 6 1/2in x 13ft 1 1/2in
- CONF 22-260781-20
- Quantity: 1
- MDS
- Availability: April
- Discount: 40% Off
- Retail Price: $8,971.84
- **Sale Price: $5,383.10**

Poliform

CARPET

Tratto Ruggine Rectangular Carpet

- COTP
- cotton wave, fur in Himalayan wool and bamboo silk
- Dimensions: 230cm x 400cm/7ft 6 1/2in x 13ft x 1 1/2in
- CONF 22-260781-20
- Quantity: 1
- MDS
- Availability: April
- Discount: 40% Off
- Retail Price: $8,982.42
- **Sale Price: $6,287.69**

CARPET

Plain Tortora Rectangular Carpet

- 22-267251-23
- Cotton weave, fur in aloe and bamboo silk, 150mm edge in a darker tone on the upper and on the lower part
- Dimensions: 250cm x 400cm/8ft 2 1/2in x 13ft 1 1/2in
- CONF 22-260781-20
- Quantity: 1
- MDS
- Availability: April
- Discount: 40% Off
- Retail Price: $9,763.50
- **Sale Price: $5,858.10**

CARPET

Relief Perla Rectangular Carpet

- 22-267251-23
- Handmade with handloom technique, cotton weave; fur in Himalayan wool and bamboo silk; boucle in Himalayan wool
- Dimensions: 300cm x 400cm/9ft 10 1/8in x 13ft 1 1/2in
- CONF 22-260781-20
- Quantity: 1
- MDS
- Availability: April
- Discount: 40% Off
- Retail Price: $11,716.20
- **Sale Price: $7,029.72**

BENCHES

Poliform

BENCH

Home Hotel Bench

- PL185
- Black elm
- Dimensions: 230cm x 400cm/7ft 6 1/2in x 13ft 1 1/2in
- CONF 22-260869-1
- Quantity: 1
- MDS
- Availability: April
- Discount: 40% Off
- Retail Price: $5,935.15
- **Sale Price: $3,561.09**

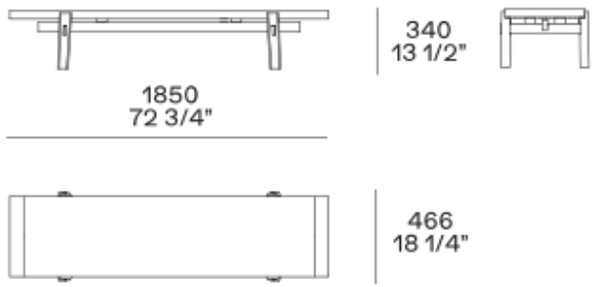

Poliform

SIDEBOARDS

Poliform

SIDEBOARDS

Symphony Sideboard with Inner Drawers

- MSM5
- Shelf Glass Fume, Top Marble Matte Sahara Noir with Polyester Treatment Structure Gold Oak Feet and Handle Matte Brown Nickel, includes 2 Wood Shelves
- CONF 22-270957-8
- Quantity: 1
- MDS
- Contact salesperson for availability
- Discount: 40% Off
- Retail Price: $16,204.65
- **Sale Price: $9,722.79**

Symphony Sideboard with Inner Drawers

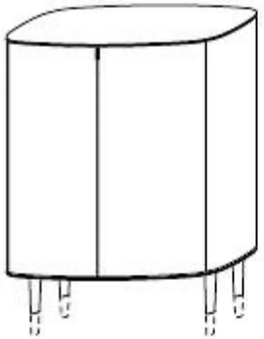

MSM5

width	1015	40”
depth	545	21 ½”
h 1300-1400		51 ¼”-55”

MSM5

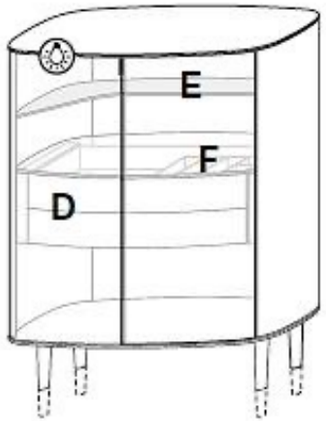

Symphony Sideboard with Inner Shelves and Glass Shelf

- MSM6/RV001
- Top Marble Matte Sahara Noir with Polyester Treatment Structure Gold Oak Feet and Handle Matte Brown Nickel Bottom Drawer Cover Technoleather Nocciola
- CONF 22-270957-9/22-270957-10
- Quantity: 1
- MDS
- Contact salesperson for availability
- Discount: 40% Off
- Retail Price: $14,772.90
- **Sale Price: $8,863.74**

Symphony Sideboard with Inner Shelves and Glass Shelf

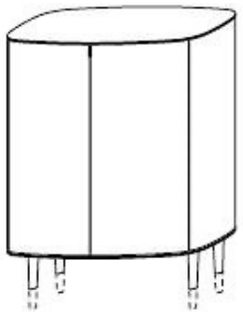

MSM6			RV001		
width	1015	40”	width	960	37 ¾”
depth	545	21 ½”	depth	425	16 ¾”
h	1300-1400	51 ¼”-55”	height	8	¼”

MSM6

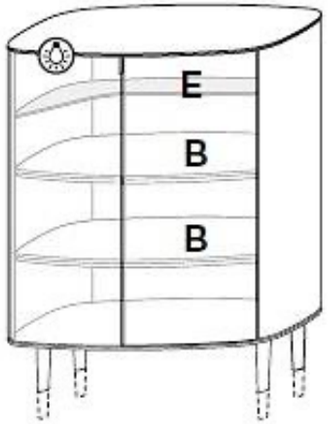

Symphony Sideboard

- MSM1
- Top marble matte sahara noir; structure black elm; base matte brown nickel
- CONF 22-260195-102
- Dimensions: w.212.5cm or 83.75" d.54.4cm or 21.50" h.68cm or 26.75" base h.30cm or 11.75"
- Quantity: 1
- MDS
- Availability: April
- Discount: 40% Off
- Retail Price: $17,526.00
- **Sale Price: $10,515.60**

Symphony Sideboard

MSM1

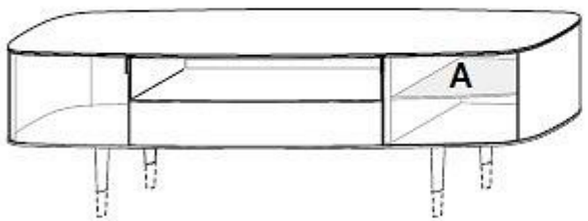

Cables passage arrangement
(included in the price)

DAY SYSTEMS

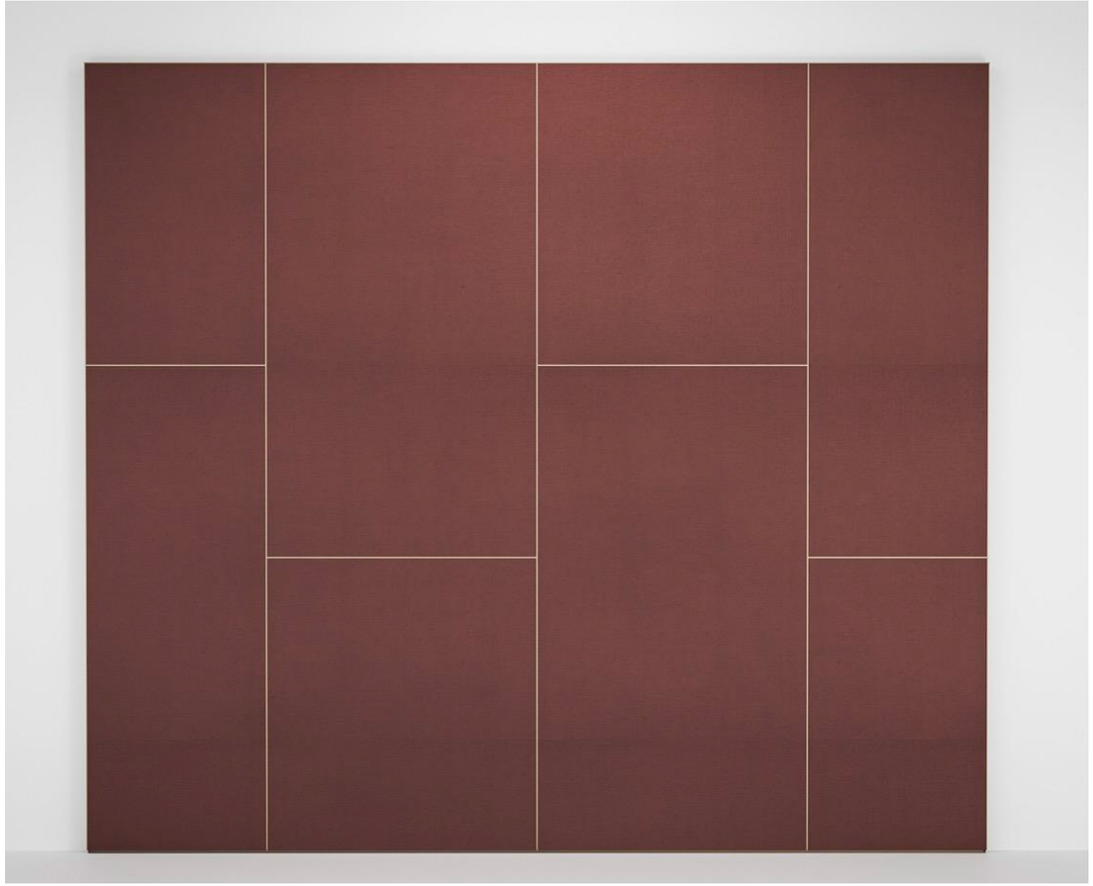

Code Panels

- Wall Paneling Lino Chiaro
- Wall Paneling Profiles Champagne
- CONF 21-192886-9
- Quantity: 1
- MDS
- Available Upon Request
- Retail Price: $8,292.65
- Discount: 70% Off
- Sale Price: $2,487.80

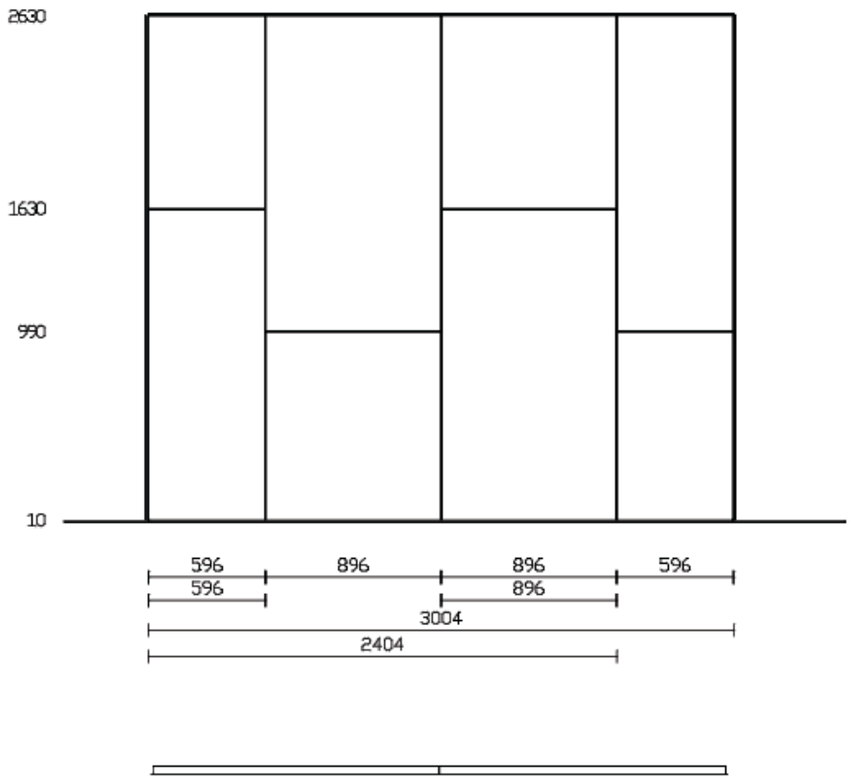
2630
1630
990
10
596
896
896
596
596
896
3004
2404

Code Panels

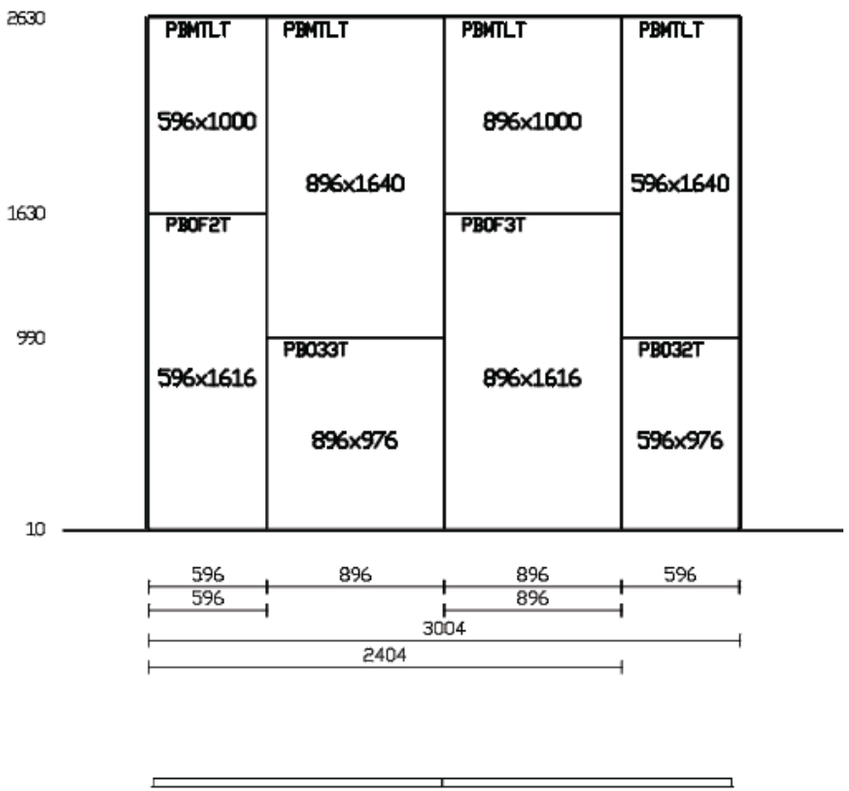
2630
1630
990
10
PBMTLT
596x1000
PBMTLT
896x1640
PBMTLT
896x1000
PBMTLT
596x1640
PBOF2T
596x1616
PBOF3T
896x1616
PB033T
896x976
PB032T
596x976
596
896
896
596
596
896
3004
2404

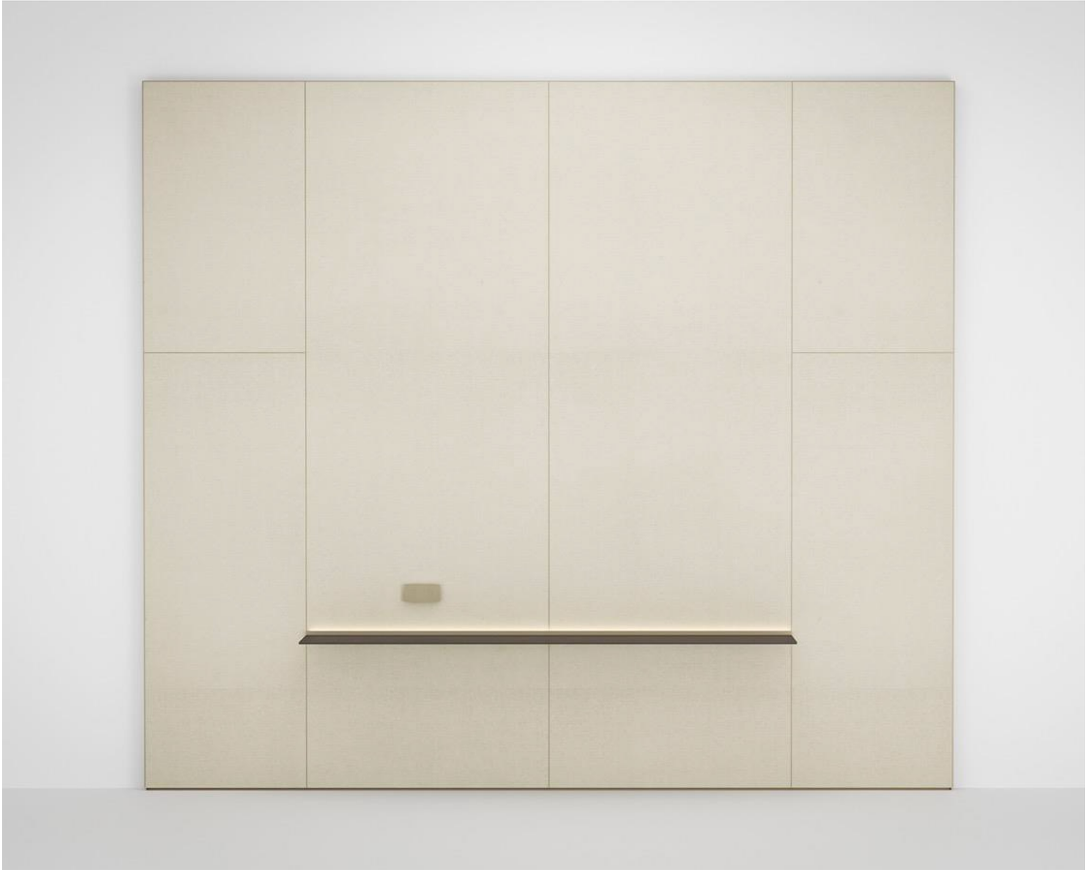

Code Panels With Shelf

- Led Lamps
- 3100¦ K. - 110v
- Wall Paneling Lino Chiaro
- Wall Paneling Profiles Champagne
- Wall Paneling Shelves Metallic Lacquered Bronzo 23
- Profiles For Wall And Wall Panel Shelves Champagne
- CONF 21-192035-10
- Quantity: 1
- MDS
- Available Upon Request
- Retail Price: $10,430.50
- Discount: 70% Off
- **Sale Price: $3,129.15**

DAY SYSTEMS

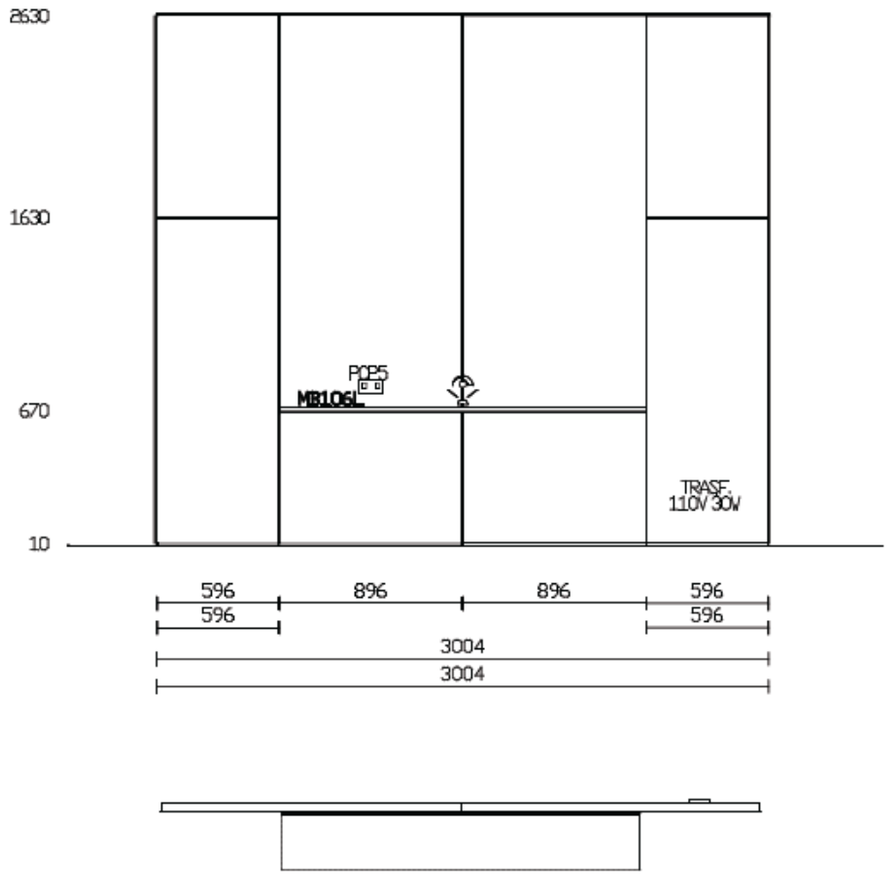

Code Panels With Shelf

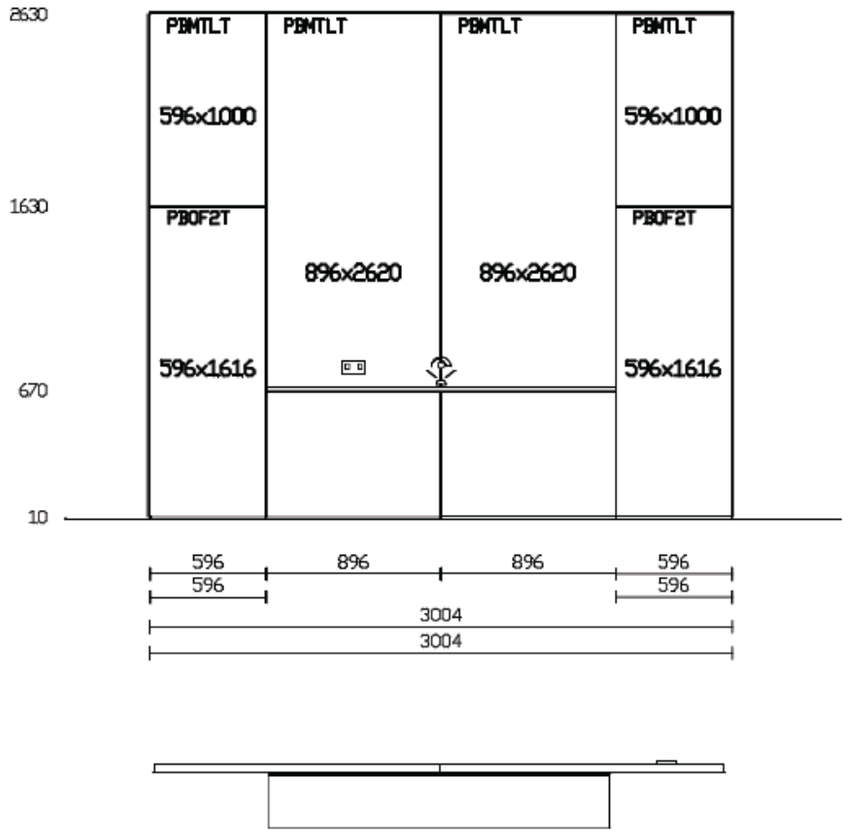

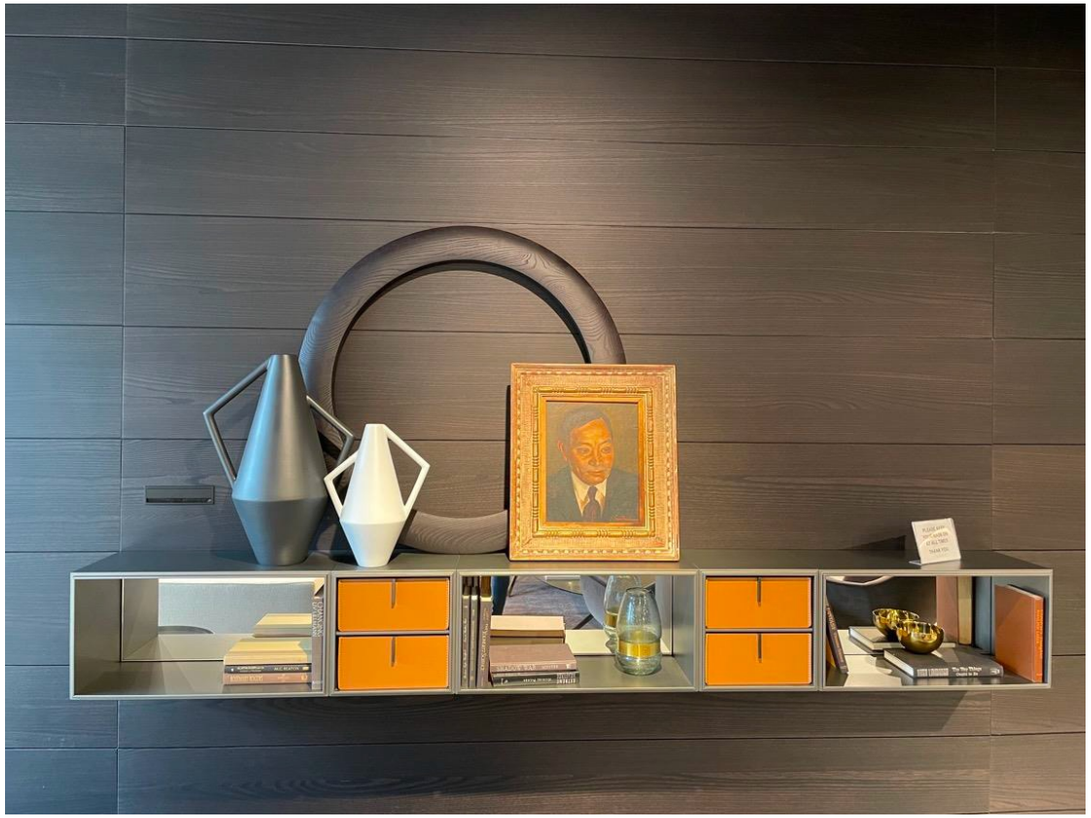

Quid Day System

- Back Panel Finish: Black Elm
- Display Case: Piombo
- Hide Drawers: Natural Invecchiato
- CONF 17-161458-1
- Quantity: 1
- NY
- Ready To Ship
- Retail Price: $27,651.90
- Discount: 75%
- **Sale Price: $6,912.97**

Quid Day System

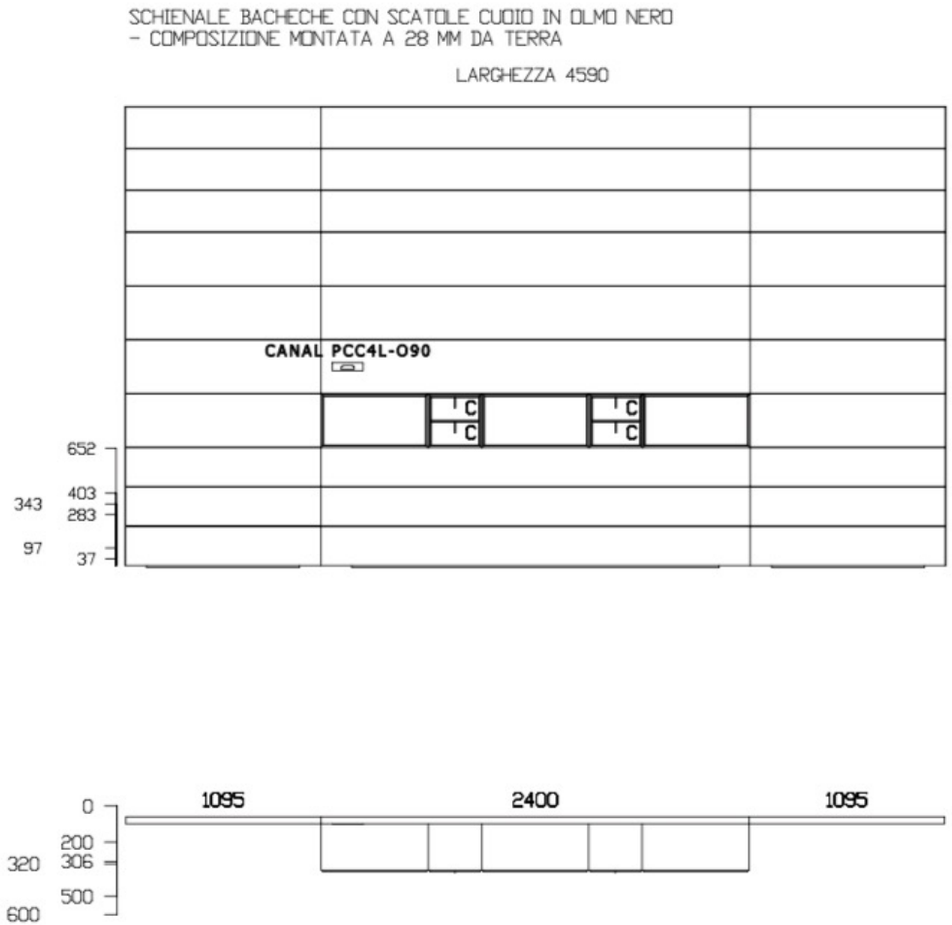

Poliform

Quid Coplanar Day System

- Fronts blue mirror; top saint laurent marble; sides moka glossy laquer; panels metal lacquer bronzo; shelves moka matte lacquer; profiles matte brown nickel
- CONF 19-173746-1
- Quantity: 1
- MDS
- Availability: April
- Discount: 40% Off
- Retail Price: $26,628.25
- **Sale Price: $15,976.95**

DAY SYSTEMS

Quid Coplanar Day System

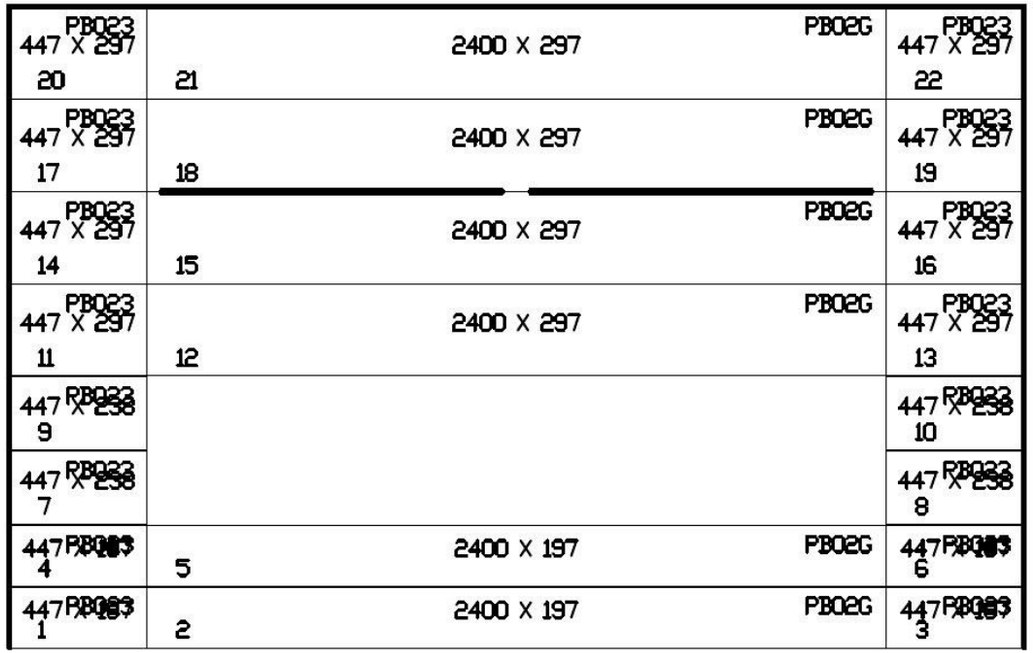

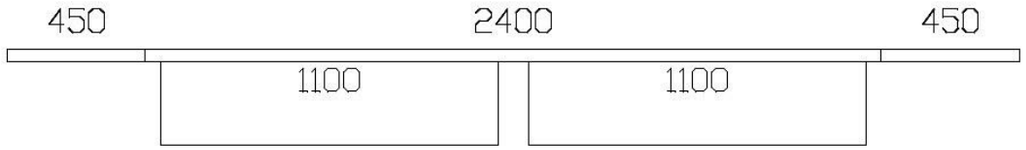

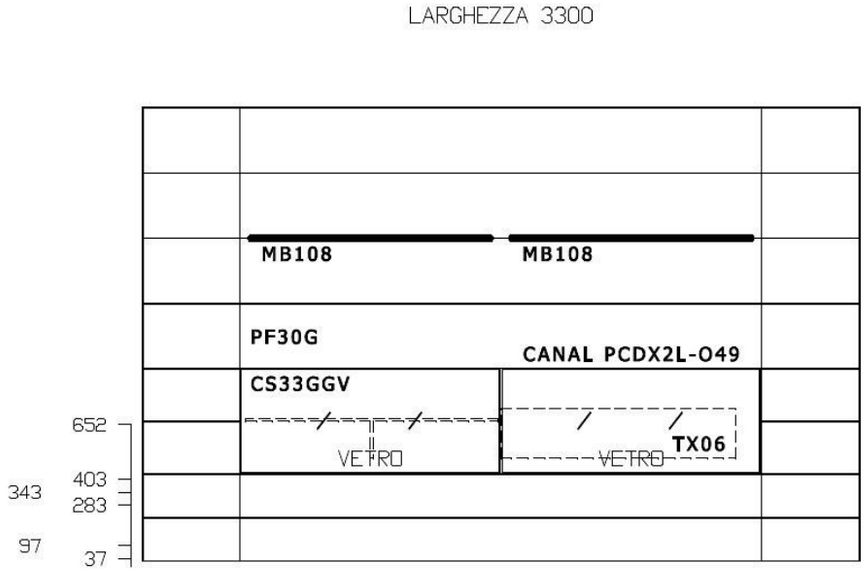

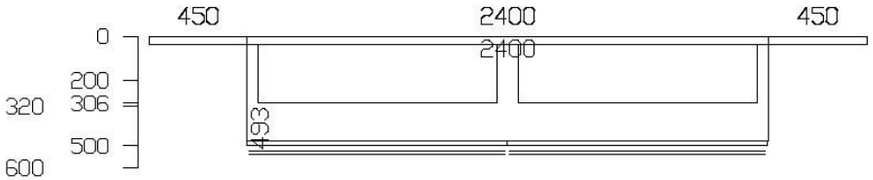

Lexington Day System

- Gold oak, champagne
- CONF 22-274954-1
- Quantity: 1
- MDS
- Availability: April
- Discount: 40% Off
- Retail Price: $45,848.20
- **Sale Price: $27,508.92**

DAY SYSTEMS

Lexington Day System

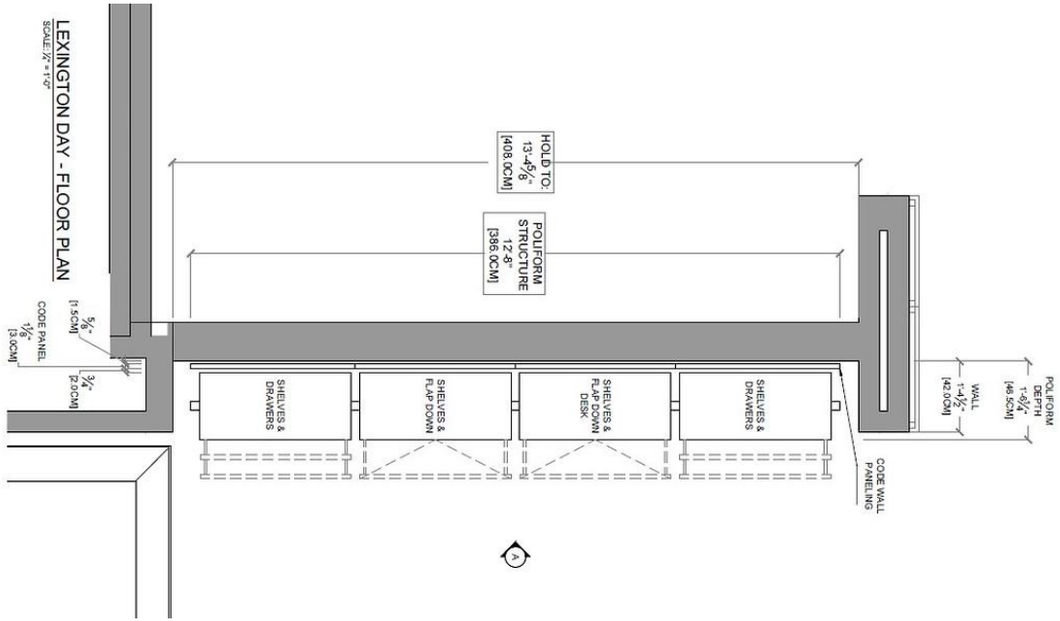

LEXINGTON DAY - FLOOR PLAN
SCALE: 1/4" = 1'-0"

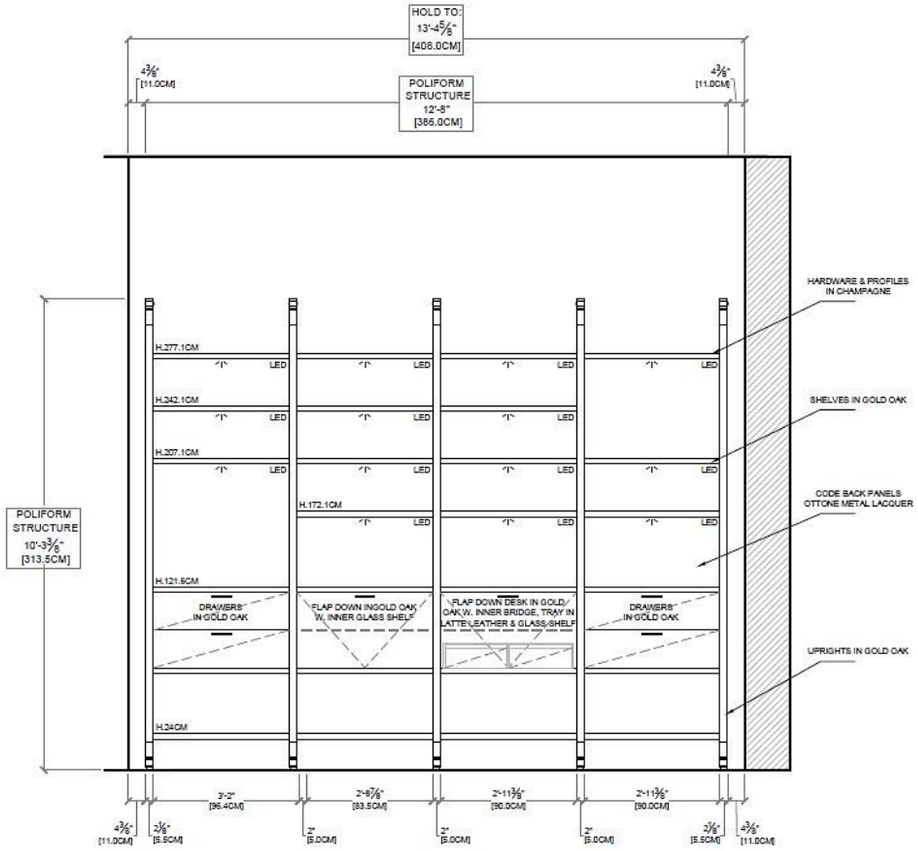

LEXINGTON DAY - ELEVATION A
SCALE: 3/8" = 1'-0"

LIGHTING

Tekio Vertical Santa and Cole Pendant Lamp

- TEKIO
- Metal P1 structure
- Washi Japanese paper P1 shade
- White S&C metallic canopy with power supply incorporated
- CONF SCN-PV19-05386
- MDS
- Available Upon Request
- Retail Price: $9,300
- Discount: 50% Off
- **Sale Price: $4,650**

Tekio Vertical Santa and Cole Pendant Lamp

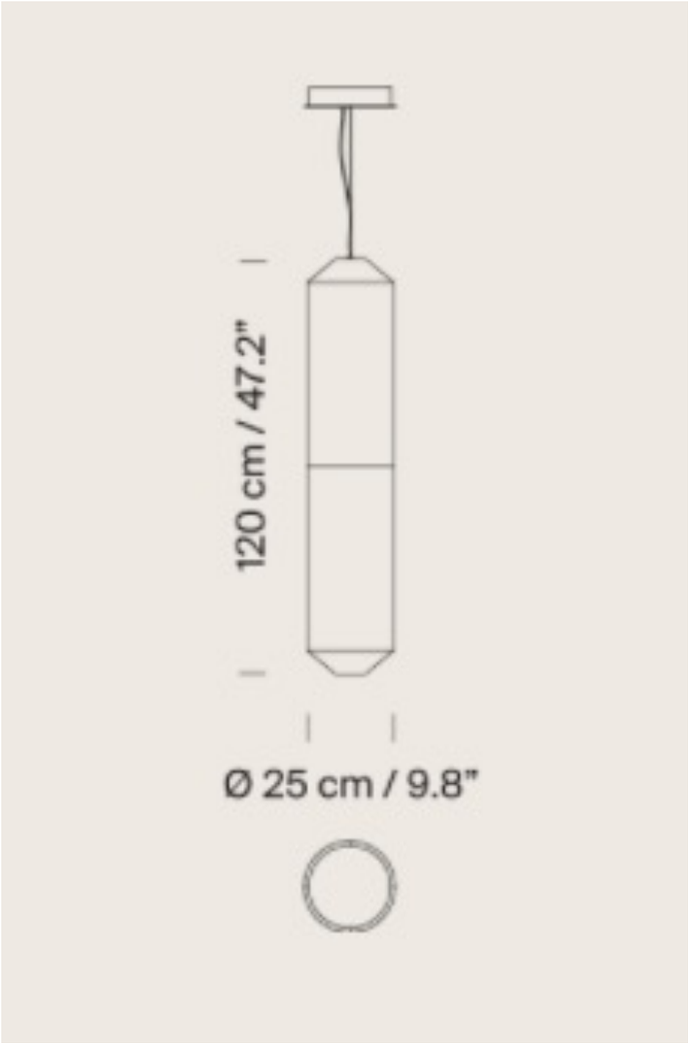

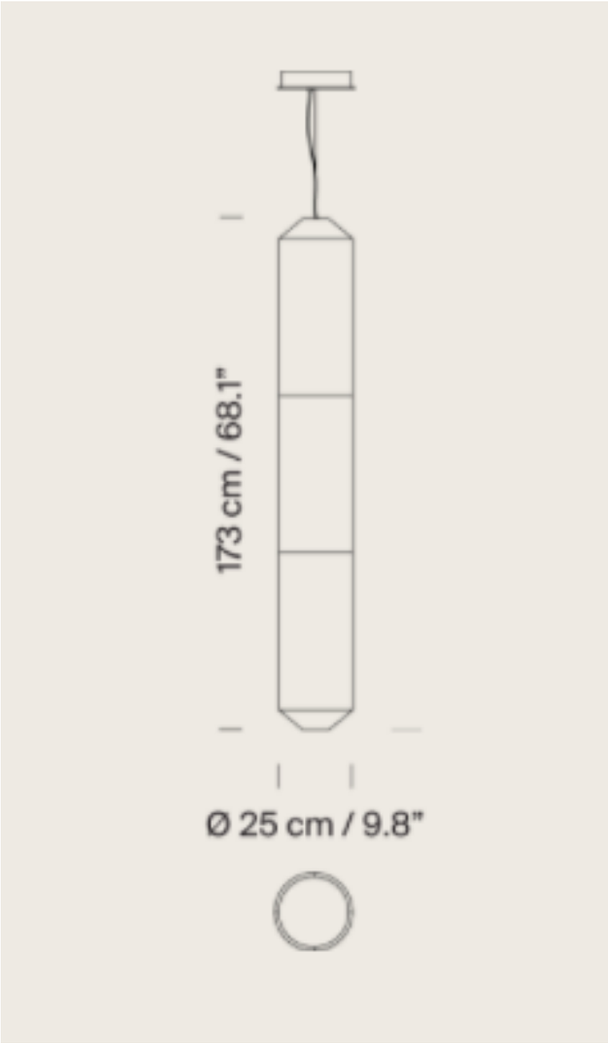

Miro Pendant Lamp

- Atelier De Troupe Lamp
- Brushed Brass
- Blackened Blass
- CONF SCN-PV19-05386
- MDS
- Available Upon Request
- Retail Price: $23,360
- Discount: 50% Off
- **Sale Price: $11,680**

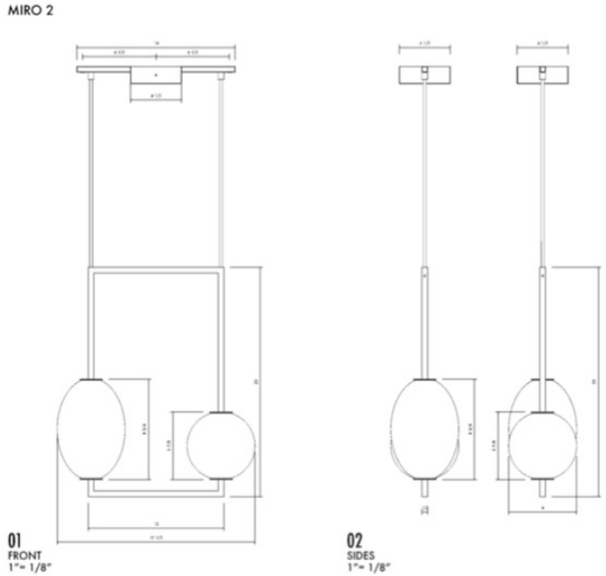

LIGHTING

Pendant Lamp

MIRO 3

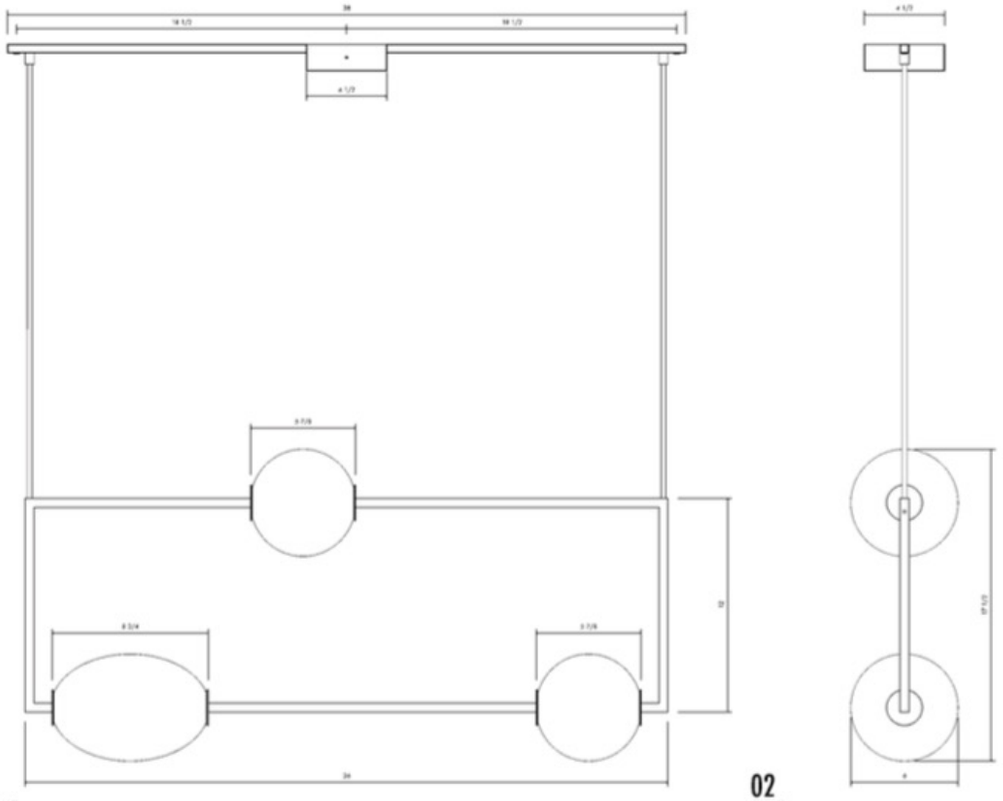

01
FRONT
1"= 1/8"

02
SIDE
1"= 1/8"

MIRO XL

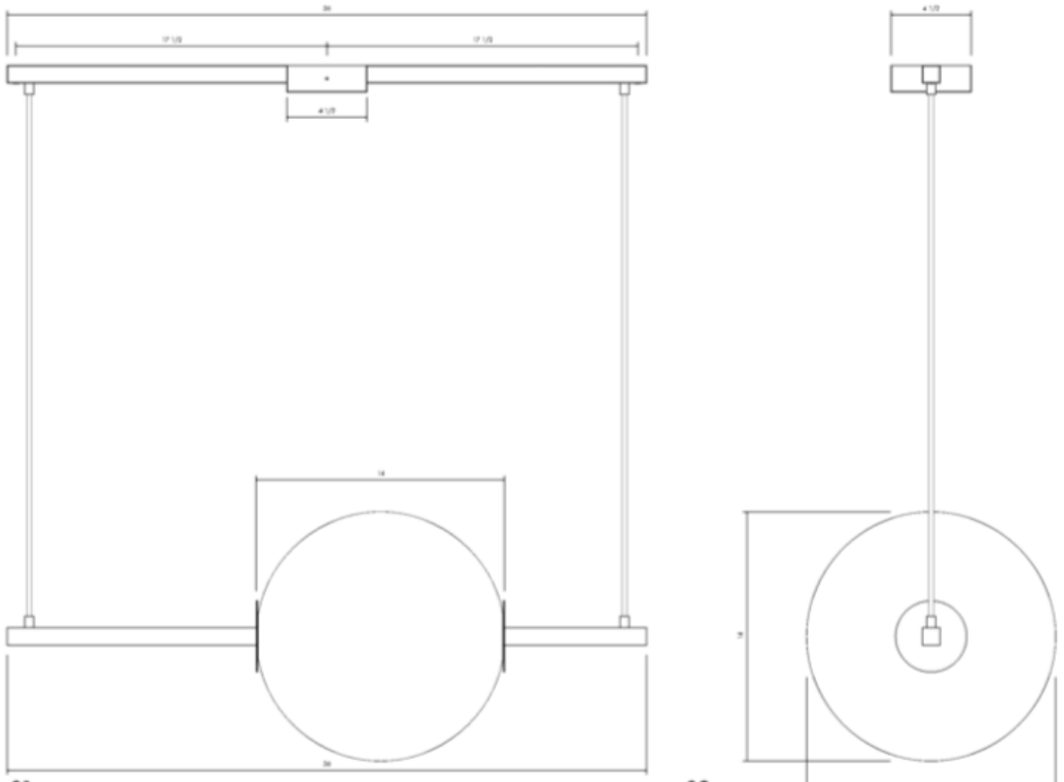

01
FRONT
1"= 1/8"

02
SIDE
1"= 1/8"

Poliform

Mini Endless Double Lamp

- 89 inches
- Finishes Polished Nickel, Color Stained Oak
- MDS
- Available Upon Request
- Retail Price: $10,490
- Discount: 50% Off
- **Sale Price: $5,245**

Mini Endless Double Lamp

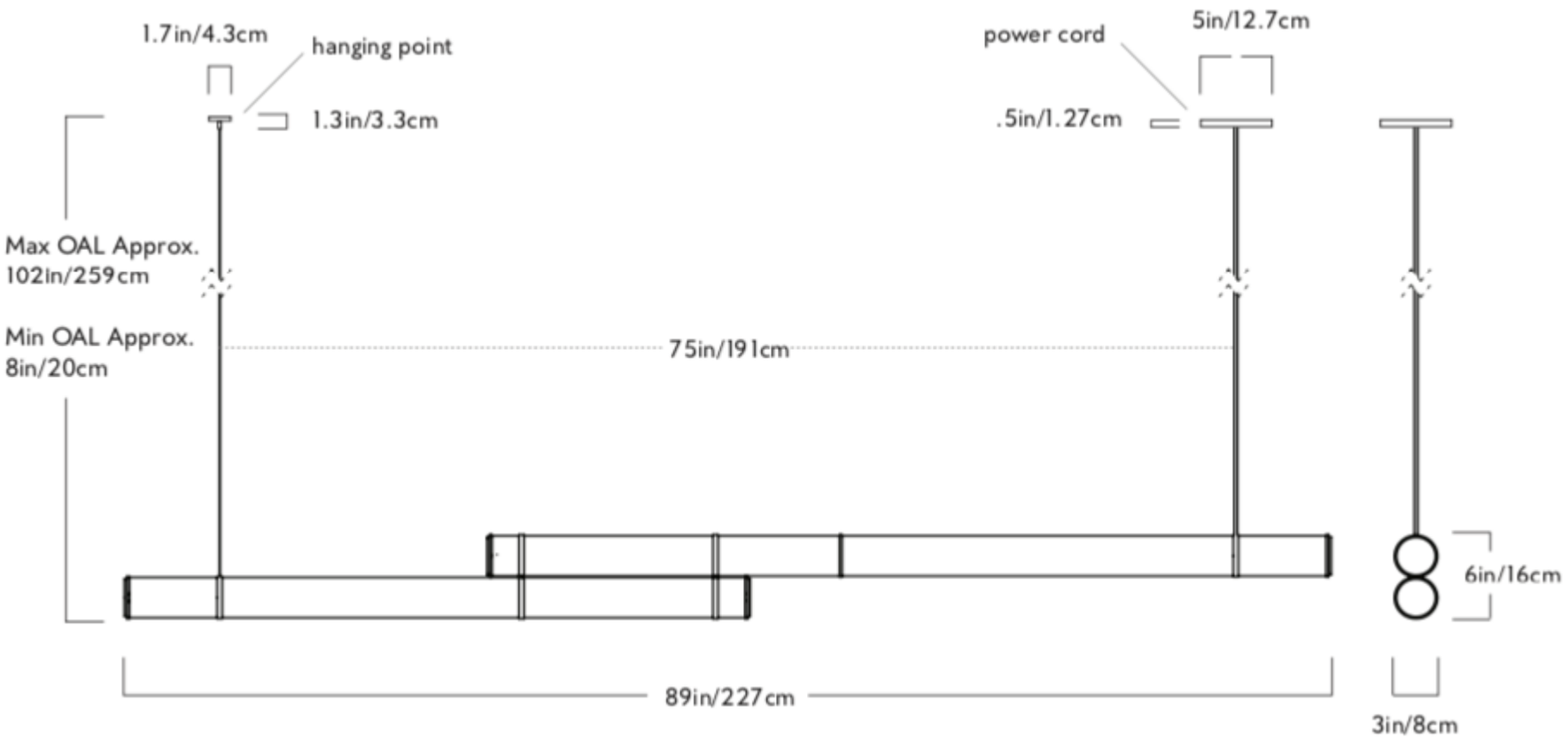

Mini Endless Double Lamp

- 89 inches
- Finishes Polished Nickel, Color Gray
- MDS
- Available Upon Request
- Retail Price: $10,490
- Discount: 50% Off
- **Sale Price: $5,245**

Mini Endless Double Lamp

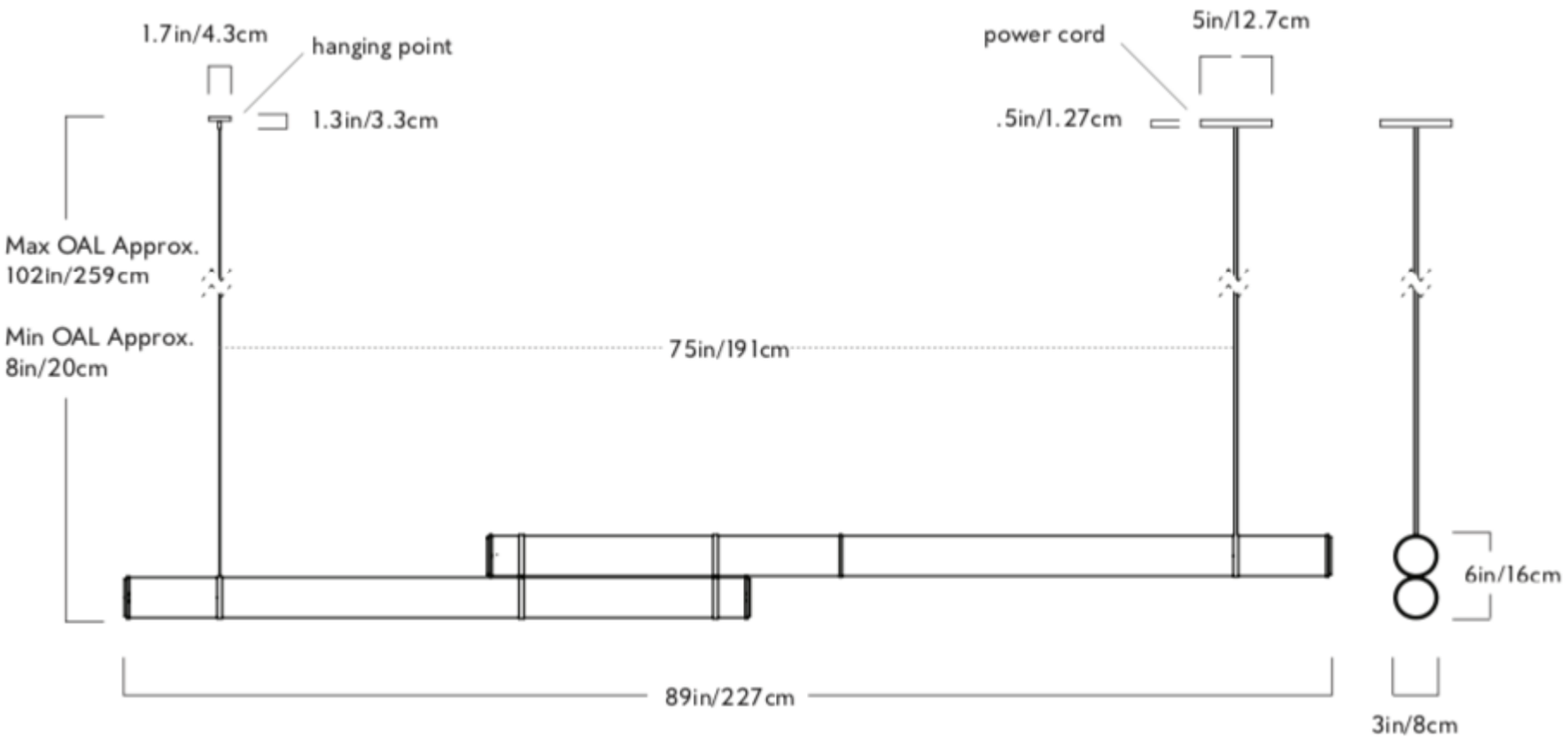

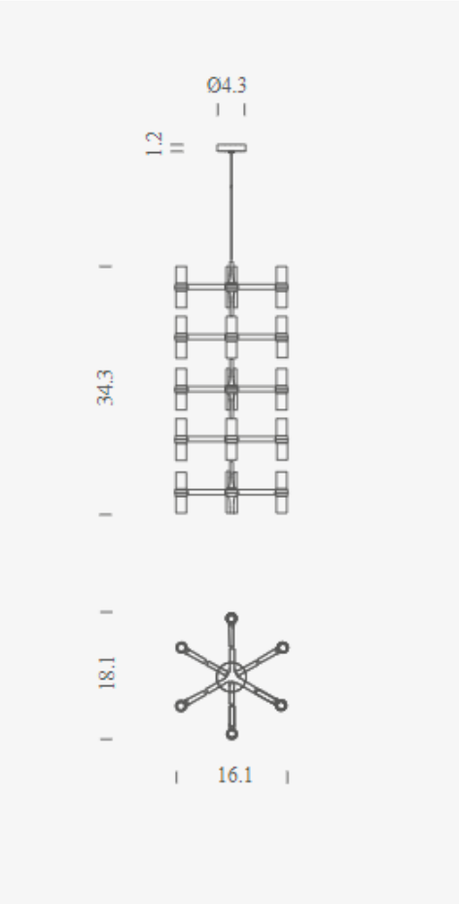

Crown Multi

- Lamping
- Source HALOPIN G9 QT-14
- Total power 15 x 25W
- Emission DIFFUSED
- Switching dimmable, according to bulb
- Tension 120V IP class 20
- Dimensions 16.1" x 18.1" x 34.3"
- Materials aluminum + glass
- Notes cable length 8.2’ max, bulb included: G9 Halo, available G9 LED kit NEMO
- Accessories Lipari ring
- Net lamp weight 12,1 lbs
- Quantity: 2
- MDS
- Available Upon Request
- Retail Price: $2,442 each
- Discount: 50% Off
- **Sale Price: $1,221 each**

Poliform

Poliform USA, Inc.
112 Madison Avenue, 12th Floor
New York, NY 10016
info@poliformusa.com
poliform.com